AABC Integrated Clean Energy Micro-Grid

[This page intentionally left blank.]

AABC Integrated Clean Energy Micro-Grid

A Colorado Department of Local Affairs Project
Led by Holy Cross Energy,
The Roaring Fork Transportation Authority,
And Pitkin County.

September XX, 2021

This report has been prepared by:
Rich Englehart, Deputy County Manager, Pitkin County;
Chris Bilby, Research and Programs Engineer, Holy Cross Energy;
Zachary Hendrix, Climate Action Manager & Long-Range Planner, Pitkin County;
Kara Sibernagel, Assistant to the County Manager; Pitkin County;
Jason White, Assistant Planner, Roaring Fork Transportation Authority

Table of Contents

Executive Summary: 1
Introduction 2
Chapter 1: Regional and Partner Background 2
1.1 – The Roaring Fork Valley and Aspen Airport Business Center (AABC) 2
1.2 – Pitkin County 2
1.3 – Holy Cross Energy (HCE) 3
1.4 – Roaring Fork Transportation Authority (RFTA) 3
Chapter 2: Project Overview 5
2.1 – Project Background 5
2.2 – Project Resiliency Benefits 5
2.3 – Project Climate Change Benefits 6
Chapter 3: Work to Date and Findings 7
3.1 – Task Outline 7
3.2 – Task 1 7
3.3 – Task 2 7
3.4 – Task 3 7
3.5 – Task 4 8
3.6 – Task 5 8
3.7 – Findings To-Date 9
Chapter 4: Implementation Plan 10
4.1 – The Phased Approach 10
4.2 – Phase 1 10
4.3 – Phase 2 10
4.4 – Phase 3 10
4.5 – Phase 4 11
4.6 – Phase 5 11
4.7 – Potential Funding Sources 11
Conclusion and Next Steps: 12

Executive Summary:

With the ever-rising threat of Climate Change, actions need to be taken to mitigate contributions through the emissions of greenhouse gases and to adapt critical infrastructure to create resilient communities in the face of the already seen increase of catastrophic events. The implementation of micro-grid systems at vital public facilities is an action that does just this.

The AABC Integrated Clean Energy Project is an innovative implementation of the tried technology of micro-grids by integrating the key facilities of three distinct public entities: Holy Cross Energy (HCE), the Roaring Fork Transportation Authority (RFTA), and Pitkin County (which also oversees the Aspen/Pitkin County Airport). These facilities provide for regional transportation, the upkeep and maintenance of the community, staging points for emergency services, and the backbone of the regional electric grid. The completion of this project has the potential to take all the facilities to net-zero emissions by allowing optimized load distribution of renewable energy, provide a distribution point to the surrounding community for stored renewable energy, and significantly improve the resiliency of the regional grid and of the facilities themselves during catastrophic events. Furthermore, through the creation of an administrative and ownership structure, this project can serve as an example for replication in any community with more than one public entity providing public services.

To implement this project, four key components are required. The first is the installation of energy storage in the form of Mega-Watt (MW) scale batteries. These installations must be paired with load management software and once installed can be expanded in a modular fashion to meet any future growth of the system. The second is the installation of new, and integration of existing, renewable energy generation into the system to provide the generation aspect of the micro-grid. This allows for operations to continue when the regional grid goes down and for the optimal use of existing renewable energy being generated in the community. The third is the creation of an administrative and ownership framework for the micro-grid and its sub-components. With three distinct public entities involved, each with its own objectives and needs, it is essential that mutually agreed upon structure for use and maintenance of the system is in place. The final component is the optimization of energy efficiency in the interconnected facilities. To minimize required load, allow for peak performance of the micro-grid, and permit such a system to have broader community benefit, energy efficiency measures such as heating districts and full electrification will need to be pursued.

To achieve all four of these components, cooperation among the involved partners will be required within their own areas of expertise. Holy Cross Energy, with its engineering expertise and direct oversight of the regional grid, is best positioned to provide system design, load management, and a tariff system for micro-grid discharge into the regional grid. RFTA is best able to provide renewable energy generation, site location for energy storage, and provide emissions free regional transportation. Lastly, Pitkin County serves as the driver of the project, providing project management, site locations for energy storage, and serves as the arbiter of the administrative structure.

With each partner doing their role, and with a steadfast desire to mitigate and adapt to Climate Change, the pursuit and implementation of this project has the potential to provide for a more resilient community and a pathway for a regionally net-zero economy.

Introduction

Through the use of innovative technologies such as smart electrification, micro-grids and heating districts, the implementation of conservation measures, and the installation of renewable energy sources, this project seeks to take the critical infrastructure and facilities of three distinct and diverse public agencies and make them resilient and renewable, and foundational steps for the accomplishment of Colorado's goal to reach 100% renewable energy by 2040. This project will provide a pilot case for taking the facilities of three distinct public entities, totaling over 182,000 ft^2 and using 3,049 MWh annually or 8.35 MWh per day, and making them fully electric, resilient, self-reliant, and sustainable.

Chapter 1: Regional and Partner Background

1.1 – The Roaring Fork Valley and Aspen Airport Business Center (AABC)

The Roaring Fork Valley is a region on the Western Slope of Colorado contained within the Roaring Fork Watershed. Stretching from Glenwood Springs to Aspen along the Roaring Fork River, the valley encompasses five incorporated municipalities – Glenwood Springs, Carbondale, Basalt, Snowmass Village, and Aspen – and three counties – Garfield, Eagle, and Pitkin County. Due to the geography of the valley, all municipalities and counties are dependent on the single arterial highway of State Highway 82, accessible through Interstate 70 and McClure Pass year-round and by Cottonwood and Independence Pass during the summer. All critical infrastructure, utilities, schools, healthcare services, are centralized around the Highway 82 corridor. The population of the Roaring Fork Valley is 33,000 to 35,000 year-round residents.

The Aspen Airport Business Center (AABC) is a development district created in 1974 on the outskirts of the City of Aspen across from the Airport. Connected to the airport via a pedestrian underpass and linked to the rest of the valley through the regional transportation system (RFTA), the AABC provides an area for higher density industrial, commercial, and residential development, in particular a large inventory of affordable housing. The AABC also contains a significant quantity of public facilities including a Colorado Mountain College campus, the Aspen Sanitation District water treatment plant, and the Aspen Animal Shelter. Of particular importance to this project, the Pitkin County Public Works campus, Roaring Fork Transportation Authority Aspen Maintenance Facility, Aspen Pitkin County Airport, and Holy Cross Energy office building and sub-station are all located in or adjacent to the AABC.

1.2 – Pitkin County

Covering 975 square miles, Pitkin County resides in the Roaring Fork Valley of Colorado. With its county seat in Aspen, Pitkin County manages critical services and infrastructure for the region, operating the solid waste center and airport that serve residents of three counties. Due to the large commuter community that works in Pitkin County, the County government provides essential services to the residents of the entire region regardless of its boundaries. With its commitment to providing valued and high-quality public services supporting the health, safety and well-being of people and the natural environment, Pitkin County is devoted to increasing the resiliency of its operations and infrastructure, as well as those of other crucial public entities, in a manner that allows for adaptation to and the mitigation of Climate Change. Pitkin County operates the Public Works Campus and Pitkin County and Aspen Airport. The Pitkin County Public Works Campus

houses all operations for the Public Works Department, including Road and Bridge and Fleet. These operations cover a range of activities from infrastructure maintenance and construction to snow plowing. The Pitkin County and Aspen Airport operates all airport activities, covering commercial and general aviation flights as well as a facility firehouse.

1.3 – Holy Cross Energy (HCE)

Founded in 1939, Holy Cross Energy (HCE) is a not-for-profit rural electric cooperative that provides safe, reliable, affordable, and sustainable energy and services that improve the quality of life for more than 43,000 members and their communities in Western Colorado. With a vision to lead the responsible transition to a clean energy future, HCE committed to providing 100% carbon-free electricity to its members by 2030 (100x30). HCE's initiatives to reach 100x30 include working with members and communities to achieve energy optimization, a cleaner wholesale power supply, utilizing local clean energy resources, distributed energy resources, and smart electrification.

Today, 47% of HCE's power supply comes from clean energy resources, mainly from renewable resources such as solar, wind, biomass, hydro, and innovative coal-methane recovery. HCE members have consistently asked for aggressive action on climate action. HCE has consistently supported and voluntarily exceeded legislative targets established for larger utilities to increase clean and renewable energy percentages in response to this member interest.

HCE's Aspen office building was established in 1979 in the AABC next to the Aspen substation to provide a member services desk and housing for linemen. The substation now services 5,000 members, including City of Aspen municipal buildings and the Aspen Airport.

In late 2021, after a years-long approval process involving multiple entities, the 5MW Pitkin County Solar farm became operational, realizing the goal of bringing locally-generated power to the Upper Roaring Fork Valley. The solar farm is three miles north of the AABC and when couple to battery energy storage, it will provide the generation needed to energize the microgrid during black sky events. Prior to this project, HCE worked with our community partners to understand the efforts needed in providing resilience to the Upper Roaring Fork Valley. The work was published by RMI in May 2020 under "*Working together toward a more resilient future*". And most recently, HCE's Roaring Fork Valley 2021 fiber implementation, 50% DOLA grant matching funds and regional partnerships present a rare opportunity to efficiently and effectively advance resilient communications infrastructure in the Upper Roaring Fork Valley.

1.4 – Roaring Fork Transportation Authority (RFTA)

The Roaring Fork Transportation Authority (RFTA) is the second largest transit agency in Colorado and the largest rural transit agency, by ridership, in the nation. Pre-pandemic, 2019 annual ridership was 5.5 million. The fleet consists of approximately 100 revenue service buses with a fuel/propulsion diversity of diesel, compressed natural gas (CNG) and battery electric bus (BEB).

RFTA is the designated regional transit agency (RTA) for its eight jurisdictional members that consist of three counties and six incorporated municipalities in rural, west-central Colorado. RFTA covers a 70-mile service region, utilizing State Highway 82 (SH82) Bus Rapid Transit (BRT) Corridor from Glenwood Springs to Aspen, as well as section of I-70 and US-6 from Rifle to

Glenwood Springs. Under service agreements, RFTA also provides the municipal transit services for the Cities of Aspen and Glenwood Springs. Additionally, RFTA maintains an annual service contract with Garfield County to provide transit services for persons with disabilities who reside within the communities of Carbondale, Glenwood Springs, New Castle, Silt, Rifle, Parachute, and unincorporated Garfield County.

Chapter 2: Project Overview

2.1 – Project Background

In 2019, Pitkin County in partnership with Holy Cross Energy and the Roaring Fork Transportation Authority (RFTA) applied for a Renewable and Clean Energy Challenge Planning Grant from the Colorado Department of Local Affairs (DOLA) to investigate the implementation of integrated clean energy technologies at critical public facilities at the Aspen Airport Business Center (AABC).

The project focused on the facilities of the Pitkin County Public Works Campus, the Pitkin County and Aspen Airport, the RFTA Aspen Maintenance Facility (AMF), the HCE offices and sub-stations, and the Brush Creek Bus Rapid Transit (BRT) Station & Park and Ride. All of these facilities are in close proximity to each other, allowing for that sharing of infrastructure improvements and implemented networks.

The feasibility study focuses on the implementation of three systems. The first revolves around conservation measures and updates, as well as renewable energy generation, that can be implemented at the individual facilities. The intent of this focus is to minimize overall energy use of the facilities and provide energy generation to increase clean energy use. The second centered on the implementation of a heating district system linking all of the facilities. As the primary energy use is the heating loads needed for these facilities, such a system would allow for the distribution of excess heat between the buildings to mitigate the need for energy use relating to heating and cooling. The third concentrates on the creation of a micro-grid incorporating all of the facilities. Such a system would allow for critical services to continue in the event of a power outage and for generated clean energy to be stored for use when such systems were unable to operate.

As these implemented systems would be shared amongst facilities owned and operated by three distinct public entities, the feasibility study also aims to outline an administrative and ownership framework for the systems. Such a framework would not only need to address the ownership and payment for the physical equipment and its maintenance, but also outline ownership of the energy contained within such systems. Prioritization of electricity use from the micro-grid, equilibrium of heating between the facilities, and timing and costing of discharge of electricity back into the grid from the system are all key items to be addressed within this framework.

2.2 – Project Resiliency Benefits

The project provides the opportunity to dramatically increase the resiliency of the Upper Roaring Fork Valley electrical grid. As was made abundantly clear during the Lake Christine Fire, when the fire nearly burned down the sole transmission line to the upper valley, the electrical grid is vulnerable to catastrophic failure due to the single point of failure in the mid-valley region. As a result of the geography of the Roaring Fork Valley, there is only one pathway for transmission lines to feed the upper valley from the down-valley area. Because of this singular avenue of electrical transmission, improving the grid resiliency in the upper valley region is vital.

A key tool to improve grid resiliency without adding additional transmission lines or an up-valley generation plant is to implement micro-grids. Micro-grids require both a source of electrical generation and a means of storage for later use independent of the primary grid. Although these systems can be applied on an individual or neighborhood basis, the most important facilities to be backed up are those essential to emergency response efforts. The implementation of a micro-grid at the identified facilities permits just such a back-up.

These facilities provide vital emergency services in the event of a catastrophic grid failure. Snow-plowing and infrastructure services of the County are based out of the Public Works campus, services that will be necessary in the event of a mudslide, fire or avalanche. The Aspen Maintenance Facility provides passenger services needed to evacuate the public. The Pitkin County and Aspen Airport provides the only means for rapid deployment of out of region resources, aid and personnel. And the Brush-Creek Park and Ride is the logical staging point for emergency services such as the Red Cross or FEMA. By backing these sites up on a self-reliant and resilient micro-grid, it ensures that the County is able to respond to any crisis event.

2.3 – Project Climate Change Benefits

The project allows for the mitigation of greenhouse gas emissions and for the facilities contained within the microgrid to become net-zero facilities in a manner that minimizes service disruptions and ensures long-term viability. This is done in two manners: through the creation of a system that allows for locally generated renewable energies to be used during times of peak load demand and through the provision of a storage center that can act as an accumulation and distribution hub for the surrounding region.

Currently, the facilities contained within the energy box use a daily average of 8.19 MWh in electrical load. Upon full electrification of the facilities and the final construction of the new airport terminal, the average daily electrical load will be 11.67 MWh. Upon completion of the first 3 phases of the implementation of the project, sufficient local renewable energy generation and storage will be available to provide the majority of the needed electrical load. This allows for the facilities to be powered fully through renewables during the day when the sun is shining and fully from stored renewable energy in the micro-grid during peak and night-time hours. Therefore, this project will fully remove the reliance of these existing facilities on carbon intensive electricity sources.

Upon full implementation of the project and completion of the facility rebuilds, all of the facilities will be fully electrified and decarbonized. This is due to the existing abundance of local renewable energy contained in the micro-grid from the first three implementation phases and from the ability for easy storage expansion in later phases due to the existing installed infrastructure from the initial phases of this project. This means that full implementation of this project has the potential to negate upwards of 946 tonnes of annual CO_2e emissions upon completion of phase 3 of the projects and upwards of 1,536 tonnes of annual CO_2e emissions upon full implementation of the project from the Airport and Public Works Campus alone.

The other key Climate Change benefit of this project is its ability to be an accumulation and distribution hub of renewable energy for Holy Cross Energy's regional grid. Due to the projects central location in relation the tertiary valleys of the upper Roaring Fork Valley, and combined with the battery storage required for all residential renewable energy systems, the project can provide a hub and spoke network of renewable energy storage for the regional grid. Such a system allows for Holy Cross to discharge stored renewable energy into the grid during hours of peak demand, allowing for the removal of much of the need for coal or natural gas powered Peaker plants and permitting the grid as a whole to become cleaner.

The Climate Change from the proposed system therefore span from location specific to region wide and are durable and present regardless of what changes to operations or facilities may occur.

Chapter 3: Work to Date and Findings

3.1 – Task Outline

The conduction of the feasibility study on the micro-grid and heating district system linking the AABC public facilities was broken down into five tasks. Each task is ascribed to a crucial step allowing future work to be built upon it. This process was determined to allow for optimal project management, timely completion of the study, and to permit the involved stakeholders knowledge of their responsibilities.

The five tasks are: 1) site assessment of existing infrastructure, 2) evaluation of potential conservation measures for each facility, 3) determination of current energy load and energy load after conservation measures to create an "energy box," 4) engineering analysis of integrated clean energy systems, and 5) economic, ownership, and administrative framework for the integrated clean energy systems.

3.2 – Task 1 (Completed)

The first task of site assessments of existing infrastructure centered on establishing existing conditions of the facilities. Site assessments were conducted via in person site visits and analyzing as-built plans, historical permits, and maintenance records. In addition, a previous commission report of the RFTA AMF was used.

Site assessments determined mechanical equipment installed, heating and cooling systems, lighting installations, behavioral and time of day use of facilities, back-up energy generation, and any existing renewable and conservation measures already implemented. Assessment of these systems gathered efficiency, maintenance, and life cycles data.

This information was then gathered into a comprehensive report on each facility. This report outlined all present equipment, use, and maintenance history for each facility to provide the basis for the following tasks.

3.3 – Task 2 (Completed)

The second task of identification of potential conservation measures is designed to optimize the facilities. In order for integrated clean energy systems such as a micro-gind or heating district to function optimally, reduction of energy inefficiencies is necessary. Minimizing heating and electrical needs allows for a heating district to operate more efficiently and for a micro-grid to power more critical services in the event of a grid failure. Such optimization also permits for the systems to be smaller in scale, reducing costs and space needs.

To complete this task, information on existing condition from task 1 was used as a baseline. Efficiency measures such as improved boiler systems, LED lighting, smart control systems, and improved building envelop were all identified for potential installation. Wherever possible, full electrification of facilities was prioritized. To augment the conservation measures and electrification, and to improve the potential resiliency of a micro-grid, potential sites for additional photovoltaic systems were also assessed. Although technically part of task 5, all conservation and renewable equipment was costed out for installation and operation.

3.4 – Task 3 (Completed)

The third task of determining current and final energy loads of the facilities allows for assessment of the size and scope of integrated clean energy systems and a determination of the energy needs

upon completion of the project. This information is combined to create an "energy box." An energy box is a conceptualization of all the energy needs of the facilities contained within a geographic boundary. It allows for the determination of total loads, seasonal variabilities, and emergency operations necessities of the facilities contained within it.

The energy box constructed for this project contained the Public Works Campus, the RFTA AMF, the Aspen/Pitkin County Airport, the HCE office building, the Brush Creek Park and Ride, and the 5 MW Solar Farm currently being constructed just outside the AABC. While assessment of facilities did not include the solar farm or Brush Creek Park and Ride, these facilities were included in the energy box for future expansion of the integrated clean energy systems and to allow for additional regional resiliency and system load management.

3.5 – Task 4 (Completed)

Task 4 centers on the investigation and planning of integrated clean energy systems. Two systems are being considered as part of this task. The first is that of a micro-grid system linking all of the facilities for electrical resiliency. The second is a heating district used to minimize heating loads on the facilities and thus reduce overall energy loads.

A micro-grid system consists of facilities electrically linked and containing a method for electrical generation and a method for electrical storage. Such a system also requires a load management software to distribute electricity when and to where it is needed. Within this task, location of storage and generation systems, the sizing of such systems, and their networking is being determined. This information will be utilized to assess costs of installation and maintenance, how such a system can be discharged into the grid when stored electricity is not needed, and tariff rates for load discharges.

A heating district is a thermal exchange system between multiple buildings. Pipes linking facilities transfer heat to and from facilities in order to take excess thermal load out of one facility and transfer it to another where it is needed. In essence, the system strives to create a thermal equilibrium between all the connected facilities. Such a system reduces the need for heating or cooling systems to operate as removing heat from one facility can cool it and inserting the heat into another can heat it. This task seeks to determine what infrastructure is needed, where excess heat loads are present for transfer, and the operational network for such a system. The task also seeks to cost out the installation and maintenance of the system.

3.6 – Task 5 (Anticipated Completion Summer of 2022)

The final task of this project is to determine the administrative and operational framework for the integrated clean energy systems as well as to cost out the installation and maintenance costs of the results of task 2 and 4.

Given that these facilities are owned and operated by three distinct public entities, the varied operational considerations of each need to be considered and their individual needs during a power outage or catastrophic event taken into account. Who manages such a system, ownership of infrastructure, payment of installation and maintenance, and ownership of the energy contained are all significant considerations for an administrative and operational framework to address. Such a framework will also analyze payment responsibilities for the implementation of the project. While a firmly set administrative framework will not result from this task, the overall outline of one shall be determined, allowing for refinement during the implementation stage of the project.

In addition to the administrative framework, this task will build off the previous work done, particularly tasks 2 and 4, to construct a costs analysis of the implementation of the project. Costs will cover the installation and maintenance expenditures associated with implementing the conservation measures at each facility, construction of renewable systems, build-out of the micro-grid and heating district infrastructure, and implementation of the necessary networking software for operation.

3.7 – Findings To-Date

An engineering analysis has been completed and is summarized in the Microgrid and District Energy feasibility report in the appendix. This report develops details on the requirements and arrangement of a potential microgrid system. Strategies for control and protection are discussed. A conceptual one line diagram is included to illustrate the results of the study. The resiliency benefits of the microgrid are explored in tandem with expect conversion of building heating to electric sources. Depending on the time of year, solar resource, and battery capacity, the microgrid can be self-sufficient for significant periods of time does not provide guaranteed operation during an outage without additional generation, energy storage, or load shedding.

The analysis also considered several different district energy options. Aspen has a demanding climate for heating, but the analysis revealed that little energy is needed for cooling. As such the district systems focused on solutions for heating with ground source heat pumps and heat recovery from wastewater being the most efficient systems. One of the building improvements being considered is large snowmelt system associated with the new airport terminal. This highly variable load has the potential to create a large electrical demand. A district system with thermal energy storage was shown to effectively reduce electrical demand to the point that electrical infrastructure improvements could be avoided. Although a district energy system could provide significant advantages the cost of a district system will be high due to the distances between buildings and the transportation infrastructure that would need to be crossed. Wastewater heat recovery at the wastewater treatment plant, utility dispatchable thermal storage, or a low cost central geo-exchange bore field would increase the likelihood that a district system would be financially beneficial.

Chapter 4: Implementation Plan

4.1 – The Phased Approach

Given the complexity and cost of the proposed project, implementation has been split into 5 distinct phases that account for future planned projects and permit immediate use of the system regardless of what the status of existing facilities are. Each phase covers a unique part of the implementation process and allow for work to be planned in a manner that is consistent with available funding, on-going project planning and development, and to minimize service disruption at the facilities. It is estimated that completion of the first three phases can be completed within the three to five years. Phases 4 and 5 are estimated to be completed in eight to ten years, dependent on the completion of other facility projects.

4.2 – Phase 1

The first phase of implementation covers the core systems of the micro-grid, that of the battery storage itself. This phase will encompass engineering and land-use design of up to 6 MW of battery storage, distributed among the facilities. Each battery costs an estimated $800,000 dollars when purchasing and installation costs are considered. While 6 MW are desired to provide full resiliency of existing and future facilities and to take them to fully decarbonized electricity loads, the existing facilities can have this accomplished with 4 MW of batteries. This gives this phase a cost range of between $3,200,000 for 4 batteries to $4,800,000 for 6 batteries.

This phase will require action from all involved parties. Locations for the battery storage will be distributed amongst all of the facilities. This will allow for the greatest resiliency and effectiveness as each facility will have direct access to stored electricity as well as mitigate the spatial demands of the battery systems themselves.

4.3 – Phase 2

The second phase of implementation involves the expansion of onsite renewables. A 100 kW renewable solar system is proposed for the Public Works Campus and a 300 kW system is proposed for the RFTA AMF. These two systems will provide approximately 2.2 MWh of electricity daily, covering 26% of existing facility daily electricity needs and 19% of electricity needs upon new facility buildout.

The 100kW system at the Public Works Campus will be constructed as a carport canopy style system covering the upper parking lot on the eastern side of the campus. The system will cost $300,000 to install. The system will be constructed to shed snow to allow for full operation during the winter months.

The 300kW system at the RFTA AMF will be constructed upon the existing roof of the facility. A structural assessment has been performed confirming that the roof is able to handle the additional load of the new system. The cost for installation of this system will be $600,000.

4.4 – Phase 3

The third phase of implementation is the integration of the newly up and running 5 MW solar farm at the Aspen Sanitation Districts field across from the Brush Creek Park and Ride. This system generates 25 MWh a day, which is ample to provide for the existing and future electricity needs of the facilities. This system is already installed and the electricity generated is owned by Holy Cross Energy.

Integration will entail using the existing Holy Cross infrastructure to provide for the electricity needs of the facilities. This will require Holy Cross to perform load management between the facilities and their systems, and to implement a tariff and priority system for use and discharge of the electricity generated from this site.

4.5 – Phase 4

Phase 4 covers the installation of the identified conservation measures at the Airport AOC building, the RFTA AMF and Holy Cross offices. As the Public Works Campus and Airport terminal are scheduled to be redesigned and rebuilt in the next 10 years, no conservation measures will be implemented at them. Total costs of this phase are being determined and will be dependent on economic conditions and ongoing development of new technologies. They will cover the needed infrastructure to take the facilities to fully electric.

4.6 – Phase 5

Phase 5 covers the construction of the new airport terminal and Public Works Campus, both of which will be fully electrified. These projects will be funded using Pitkin County bonds, general funds, and any available grants. The total costs of this construction are being determined in an ongoing planning and design process separate from this project.

Additionally, as part of this phase, the construction and installation of the heating district linking all facilities will be incorporated. As new facilities will be constructed, this is the optimal time for the construction of the necessary infrastructure for the heating district to operate. A full engineering analysis of this system is being performed for HCE and will contain both the construction needs and cost analysis for the project, to be included in the final feasibility study report.

Lastly, as part of this phase, an additional 2 MW of solar is proposed for installation on airport property. This additional solar will create a more robust and resilient source of electricity for the facilities and guarantee that they are powered by renewable electricity.

4.7 – Potential Funding Sources

As phases 4 and 5 are longer term implementation phases that will take 10 to 15 years to be fully completed, as well as being funded and planned through separate projects, priority for initial funding will be given to phases 1, 2, and 3. These initial phases are planned for implementation in the next 2 to 5 years.

Funding for these initial phases are centered upon DOLA grant opportunities and the FEMA BRIC grant. The potential climate change mitigation impacts, the full electrification of critical government and public infrastructure before 2040, and the implementation of innovative technological solutions through the collaboration of multiple public entities makes this project well suited to the currently available DOLA grant opportunities. This project not only achieves the accomplishment of state climate goals, but also does so in a replicable framework for diverse facilities and complex jurisdictional interactions throughout the state.

This project is also well suited for the FEMA BRIC grant. As it directly increases the resiliency of the regional electrical grid and for key public services, this project fits the needs of this funding opportunity well. This project not only increases the resiliency of existing infrastructure and ensures ongoing operations in the event of catastrophic events, it also provides the foundational infrastructure for its systems expansion to other surrounding sites. This gives the project the

opportunity to dramatically increase the resiliency of the upper Roaring Fork Valley in ways far outside the scope of this project.

Conclusion and Next Steps:

With the nearing completion of the feasibility study and a pathway for implementation created, the next steps for this project revolve around the creation of the administrative and ownership structure for the micro-grid, the pursuit of funding opportunities, and the final engineering design.

The truly crucial next step is that of the administrative and ownership framework. Who owns what component, where is each located, and what constraints does each entity have in this regard will all have to be sorted out to allow for funding and implementation. Just as important is how such a system will operate. Day-to-day operation and blue-sky day operations (when more renewable energy is being generated than needed) will be relatively easy to figure out. On these occasions, each facility will be able to optimally operate off the system with no fear of loss of service and with excess energy able to be distributed back into the grid at a set tariff. More difficult is how the system will operate on black-sky days, the days when a catastrophic event has knocked out the regional grid and the micro-grid must operate in an independent and isolated fashion. This will require each partner to prioritize critical operations, to outline which services among the facilities have priority of need, and to determine when it is suitable and safe for any excess energy to be distributed into the grid for use by those not within the micro-grid. This conversation will be the hardest to have but also benefits from being the least pressing.

The second step is to find funding opportunities. As each entity is equally invested, matches will be evenly distributed between them. This allows for the pursuit of numerous grants that support such projects and provides long-term investment in the completion of this project. This step will be on-going as each phase of implementation is reached.

The final step is that of system design. Site location, system size, capabilities of the microgrid, connection points, and software integration will all require careful consideration. This step will likely necessitate the contracting of third-party vendors in order to perform the needed analysis and provide the required software for operation. This step will need to be performed at the beginning of each implementation phase.

Although this is a project of great complexity, both in its physical design and administration, it has enormous potential to dramatically increase the resiliency of the community and decrease the communities carbon footprint. A Greek saying is that “society grows great when old men plant trees whose shade they know they shall never sit in” and by pursuing this project, the partners are planting for future generations. With the dire nature of Climate Change and the longevity of these facilities, this micro-grid is a seedling that could eventually shade the entire Roaring Fork Valley, and be replanted throughout the state and nation. This potential, this long-term vision and investment in the future, makes this project both admirable and vital for pursuit.

AABC Energy Box
Preliminary Design Report

DOLA GRANT FUNDING REPORT

JUNE 2020 | FINAL REPORT

Prepared By:

Kimley»Horn

Contents

1.0 Executive Summary 3
1.1 Background 3
1.2 Objective 4
1.3 Project Team 4
1.4 Energy Box Sites 5
2.0 Aspen/Pitkin County Airport - Terminal ..... **Error! Bookmark not defined.**
2.1 Energy Usage Data 6
3.0 Aspen/Pitkin County Airport - Operations Center 7
3.1 Energy Usage Data 7
3.2 Mechanical Systems 8
3.3 Plumbing Systems 12
3.4 Electrical Systems 12
4.0 PCPW – Administration and Maintenance Buildings 15
4.1 Energy Usage Data 15
4.2 Mechanical Systems 17
4.3 Plumbing Systems 19
4.4 Electrical Systems 20
5.0 RFTA Aspen Maintenance Facility (AMF) 21
5.1 Energy Usage Data 22
5.2 Mechanical Systems 22
5.3 Plumbing Systems 27
5.4 Electrical Systems 28
6.0 RFTA Brush Creek Bus Rapid Transit (BRT) Station & Park-n-ride 29
6.1 Energy Usage Data 30
6.2 Electrical Distribution 30
7.0 HCE Aspen Office 31
7.1 Energy Usage Data 32
7.2 Mechanical Systems 33
3.3 Plumbing Systems 34
7.4 Electrical Systems 35
8.0 Conclusion 36

1.0 EXECUTIVE SUMMARY

1.1 BACKGROUND

Pitkin County ("the County") adopted the Pitkin County Climate Action Plan that addresses conservation measures that could be adopted to reduce its carbon footprint. The County is assuming a 30-year outlook for implementation of this plan. The initial phase in the plan is to evaluate conservation measures to be implemented at each of the facilities outlined in the Energy Volume Box (listed below under Energy Box Sites).

In May 2019, Colorado State Governor Polis approved the Roadmap to 100% Renewable Energy by 2040 and Bold Climate Action. The action plan requires the full electrification of gas-fired building equipment.

In addition to the conservation aims of the Climate Action Plan, the County's other stated goal for the project is to create flexibility in the electrical system. In recent history, incidents in the area, including forest fires and snowstorms that threatened the electrical grid, have exposed weakness in the current system. The narrow valley corridor has limited the ability of HCE to provide redundancies in the system. The proposal solution is to create flexibility in the grid by augmenting the current system with microgrid technologies, including electrical vehicle (EV) bussing and the infrastructure necessary to use the bussing energy storage in emergencies to support the grid.

Airports are one of the largest generators of greenhouse gases (GHGs) and present one of the largest barriers to meeting Colorado's 2040 goal of 100% clean energy. Energy efficiency measures and renewable energy production can be leveraged to improve airport operations, but these two aspects alone are not enough to balance the electrical demands of airports or other large-scale operations. In order to move to a clean energy system, leaders and thought innovators are looking to new and emerging technologies to balance energy systems, including both the production and storage of clean energy. The Integrated Clean Energy Systems (CES) Feasibility Analysis at the Aspen Airport Business Center (AABC) Energy Corridor looks to move these technologies, including reducing electrical use for heating and cooling through shared thermal systems from exploratory design to practical, feasible implementation.

Pitkin County and the Aspen Pitkin County Airport, working in partnership with Holy Cross Energy and Roaring Fork Transportation Authority (RFTA), will complete a feasibility analysis to create a locally sustainable and regionally resilient energy corridor throughout the Aspen Airport Business Center (see Appendix 1 for a map of the participating entities and locations). The goal of the study is to evaluate emerging clean energy technologies and best practices to design an integrated clean energy system that balances production and storage across four major public facilities: (1) Aspen Pitkin County Airport; (2) RFTA Aspen Maintenance Facility; (3) Pitkin County Public Works; and (4) Holy Cross Energy electric system operations from Brush Creek Park n' Ride to the Aspen Substation.

The second key element of the project extends beyond the technology and evaluates the economic feasibility of implementation, including what is the shared risk among entities to rely on one another's

energy production. The full scope of the feasibility analysis will include research and design of new technologies, how to retrofit existing infrastructure and identify the legal and operational framework needed to execute such a project across diverse agencies and energy operations. Specifically, the feasibility analysis will include the following tasks:

1. Evaluation of conservation measures that could be implemented today.
2. Identify what the energy load would be after conservation measures are implemented.
3. Identify the opportunities for integrated clean energy system (production, storage and distribution) at the locations and throughout the energy corridor.
    a. Both conventional and innovative technology assessments
4. Establish the business feasibility to make it happen. Including identification of:
    a. Individual agency costs
    b. Shared agency costs
    c. Shared agency benefits
    d. Shared risk among all agencies

Building an integrated clean energy system across diverse public facilities presents opportunities for not only storage and balance, but it also adds another degree of freedom and resiliency to critical infrastructure.

Consistent with the aims of this feasibility analysis, plans are currently in place to build a Net Zero Emissions airport terminal at the Aspen/Pitkin County Airport to replace the existing terminal building. Plans are also in place to replace the Pitkin County Public Works buildings within the next decade pending the acquisition of sufficient means via the available funding sources, be they grants, federal, state, local, etc.

1.2 OBJECTIVE

The objective of this report is to complete the first two tasks of the AABC Integrated Clean Energy Grant awarded in 2019. Accordingly, this report documents the energy usage and reports on energy assessments that were performed on each site in the AABC, provides recommendations for areas where conservation measures may reduce the carbon footprint, and addresses the feasibility of implementing green energy improvements and microgrid technology at each facility or a combination of facilities.

1.3 PROJECT TEAM

The project team includes Kimley-Horn and the following client partners associated with the Aspen Airport Business Center (AABC):

1. Pitkin County Public Works (PCPW)
2. Aspen/Pitkin County Airport (ASE)
3. Holy Cross Energy (HCE)
4. Roaring Fork Transportation Authority (RFTA)

1.4 ENERGY BOX SITES

Kimley-Horn has performed assessments at the sites listed below, all located in and around Aspen, Colorado. These assessments were based on the best available as-built drawings, data, photographs, and utility energy usage provided to Kimley-Horn by the Client. Electricity data was obtained directly from HCE for each site for energy usage between November 2019 and November 2020. Gas usage for each site was obtained from the clients in the form of gas utility bills over the same range of dates where possible.

These sites are listing below:

1. Aspen/Pitkin County Airport - Terminal (233 E Airport Road)
2. Aspen/Pitkin County Airport - Operations Center (AOC) (1001 Owl Creek Road)
3. PCPW Administration and Maintenance Buildings (76 Service Center Road)
4. RFTA Aspen Maintenance Facility (AMF) (0051 Service Center Road)
5. RFTA Brush Creek Bus Rapid Transit (BRT) Station & Park-n-Ride (Brush Creek & Highway 82)
6. HCE Aspen Office (215 Aspen Airport Business Center)

Energy usage data for all sites is summarized in Table 1.4.1 for reference. Additional details for this data set is available for reference in this report as Appendix 2. Sites listed below in red are not included in the full analysis of this report, but are here considered for the purpose of accounting for the total electrical load on utility grid for consideration in the AABC Energy Box study. Totals below include existing usage, usage with the future terminal, and energy usage assuming a rough estimate with full electrication of all facilities is used in the total below. Please note that this does not include the integration of any renewable energy resources. For reference in estimating future energy usage with full electrification, 1 Therm is approximately 29.3 kWh.

Table 1.4.1. AABC Energy Box Energy Usage Summary

Location	Annual Electricity Usage (kWh)	Annual Gas Usage (Therms)
Airport Terminal (Existing)	988,646	75,910
Airport Terminal (Future)	1,129,000	0
Airport Terminal Office	35,203**	N/A
Airport Base Operations Center	151,689	19,796
PCPW Admin/Maintenance Buildings	144,970****	17,718
PCPW EV Charging Stations	18,210	N/A
PCPW Solar PV Generation	(53,488)*	N/A
Animal Shelter 1 W	2,921	Not verified
Animal Shelter 2 C	2,238	Not verified
Animal Shelter 3 E	47,718	Not verified
CDOT Office	17,009	Not verified
CDOT Sand Facility	2,516	Not verified
CDOT Cabin Residence	8,228	Not verified
RFTA AMF	1,012,135	560

RFTA Battery Electric Buses (BEB) Charging Stations	364,698	N/A
RFTA Transit (BRT) Station	35,602	N/A
City of Aspen Intercept Lot EV Charging	1,935	N/A
HCE Main Office	97,762	3,262
HCE Suite A	6,499	Not verified
HCE Suite B	8,304	Not verified
TOTAL – ALL SITES (EXISTING)	**2,991,467**	**117,246*** **
TOTAL – AABC ENERGY BOX (EXISTING)	**2,908,902**	**117,246*** **
TOTAL – AABC ENERGY BOX (NEW TERMINAL)	**3,049,256**	**41,336*** **
TOTAL – AABC ENERGY BOX (ELECTRIFIED)	**4,260,401**	**0**

***Values in parenthesis indicated negative demand values or generation.**
****Newly constructed building; annual usage extrapolated based on worst case winter monthly usage.**
*****Includes only the Therms on buildings with available data.**
******Data used from November 2017-November 2018 due to entanglement of solar PV generation over the proposed time period.**

2.0 ASPEN/PITKIN COUNTY AIRPORT - TERMINAL

Pitkin County currently plans to build a replacement for the existing airport terminal with a new terminal building. Accordingly, a full assessment of the existing terminal building was not performed. For the purposes of this report, the anticipate energy usage profile for the new terminal is estimated based on the technical memorandum performed by Kimley-Horn entitled ASE Net Zero Solar. For reference, this memorandum is attached to this report as Appendix 3.

Our limited assessment and energy usage analysis for this site addresses the following building elements:

- Energy Usage Data

The energy usage data on the existing building is addressed below in Section 2.1.

The proposed terminal design would comprise a building with an enclosed area of 80,000 to 95,000 square feet and consist of two stories. The energy usage design approach is based on a net zero carbon emissions profile to be accomplished by a combination of green energy technologies, including solar and geothermal, and the purchase of energy credits, as required.

Based on the report cited, the air terminal at Williston, ND, which is of a similar size and square footage, requires approximately 1.129 GWh/year of energy.

2.1 ENERGY USAGE DATA

Based on the electricity metering data provided by HCE, Kimley-Horn found the following:

2.1.1 Electricity

The meter at the airport terminal building saw a peak electricity demand of 176 kW, average electricity demand of 113 kW, and an annual energy consumption of 988,646 kWh.

This information is also provided in Table 2.1.1 for reference.

Table 2.1.1. Aspen/Pitkin County Airport Terminal Electric Metering Data

Meter Number	Holy Cross Energy Description	Peak Demand / Average Demand	Annual Consumption
910357	Airport Terminal	176kW / 113kW	988,646 kWh
912231	Airport Terminal Office	21kW / 3.96kW	27,800 kWh
***Newly constructed building; annual usage extrapolated based on worst case monthly usage**			

2.1.2 Natural Gas

Based on the utility gas bill data provided by the Client, Kimley-Horn found the following:

The meter serving the building at this site saw an annual gas consumption of 75,910 Therms.

This information is also provided in Table 3.1.2 for reference.

Table 2.1.2. Aspen/Pitkin County Airport Terminal Gas Usage Data

Location Description	Annual Consumption
Airport Terminal	75,910 Therms
Airport Office	N/A

3.0 ASPEN/PITKIN COUNTY AIRPORT - OPERATIONS CENTER

The existing Airport Operations Center is a two-story mixed-use office building with a basement. Based on the as-built drawings provided, it was constructed between the years 2005 and 2006. Our assessment and energy usage analysis for this site addresses the following building elements:

- Energy Usage Data
- Mechanical
- Plumbing
- Electrical

3.1 ENERGY USAGE DATA

Based on the electricity metering data provided by HCE, Kimley-Horn found the following:

3.1.1 Electricity

The meter serving this site saw a peak electricity demand of 34 kW, average electricity demand of 17 kW, and an annual energy consumption of 151,689 kWh.

This information is also provided in Table 3.1.1 for reference.

Table 3.1.1. Aspen/Pitkin County Airport Operations Center Electric Metering Data

Meter Number	Holy Cross Energy Description	Peak Demand / Average Demand	Annual Consumption
910263	Airport Base Operations	34kW / 17kW	151,689 kWh

3.1.2 Natural Gas

Based on the utility gas bill data provided by the Client, Kimley-Horn found the following:

The meter serving the building at this site saw an annual gas consumption of 19,796 Therms.

This information is also provided in Table 3.1.2 for reference.

Table 3.1.2. Aspen/Pitkin County Airport Operations Center Gas Usage Data

Location Description	Annual Consumption
Airport Base Operations	19,796 Therms

3.2 MECHANICAL SYSTEMS

Based on the as-built mechanical drawings, and existing data and pictures provided to our office, Kimley-Horn found the following information on the mechanical systems throughout the building. Below is a summary of these existing systems:

3.2.1 Heating, Ventilation, and Air Conditioning (HVAC)

Central Boiler System: The central boiler system consists of three 92% Efficient gas fired condensing boilers that are interlocked and operated by an older stand-alone multi-mode Heat-Timer controller. The boilers serve the Indoor fan coils, bay unit heaters, cabinet unit heaters, radiant floor heating zones, snowmelt zones and domestic hot water heating.

Cooling / Heating systems for interior occupied spaces: The existing cooling systems serving the facility are various split system type air conditioning systems consisting of one indoor fan coil unit connected to an external condensing unit. Both the indoor and outdoor units are connected through copper refrigeration tubing and electrical wiring for the local controls. The existing condensing units use R-22 refrigerant and are rated as 12 SEER units. The indoor fan coils additionally contain a hydronic heating coil. All heating coils locate in the fan coils are served by the heating hot water loop from the central boiler plant and system pumps.

Heating system for the vehicle bays: The ARFF and SRE Vehicle Bays have heating and exhaust systems only. All heating systems serving the bays are served by the heating hot water loop from the central boiler plant, heat exchanger and system pumps. The bays have both radiant heated floor zones and unit heaters serving these spaces.

Snowmelt system for the North Entry: The North Entry is the only outdoor area that has underground snowmelt piping being served by the central boiler plant. All snowmelt zone piping is served by the heating hot water loop from the central boiler plant, heat exchanger and system pumps.

The tables below are a listing of the existing equipment that were identified between the information shown in the as built drawings and the initial client site walk and assessment checklist information that was obtained.

Table 3.2.1. Aspen/Pitkin County Airport Operations Center Fan Coil and Condensing Unit Data

Fan Coil	Area Served	Heating	Efficiency	Cooling	Efficiency	Controls
FC-1/CU-1	Lower Level West Side	Boiler, Heating Hot Water	92% Boiler	DX with R-22	12 SEER	T-Stat
FC-2/CU-2	Lower Level East Side	Boiler, Heating Hot Water	92% Boiler	DX with R-22	12 SEER	T-Stat
FC-3/CU-3	Upper Level West Side	Boiler, Heating Hot Water	92% Boiler	DX with R-22	12 SEER	T-Stat
FC-4/CU-4	Upper Level East Side	Boiler, Heating Hot Water	92% Boiler	DX with R-22	12 SEER	T-Stat

Table 3.2.2. Aspen/Pitkin County Airport Operations Center Heat Exchanger Data

Heat Exchanger	Area Served	Heating	Efficiency
HX-1	Lower Level West Side	Boiler, Heating Hot Water	92% Boiler
HX-2	Lower Level East Side	Boiler, Heating Hot Water	92% Boiler

Table 3.2.3. Aspen/Pitkin County Airport Operations Center Unit Cabinet Heater Data

Unit Cabinet Heater	Area Served	Heating	Efficiency	HP	Controls
UH-1	Equipment Room 117	Boiler, Heating Hot Water	92% Boiler	1/25	T-Stat
UH-2	-	Boiler, Heating Hot Water	92% Boiler	3/4	T-Stat
UH-3	-	Boiler, Heating Hot Water	92% Boiler	1/4	T-Stat
CUH-4	-	Boiler, Heating Hot Water	92% Boiler	1/15	T-Stat
CUH-5	-	Boiler, Heating Hot Water	92% Boiler	1/15	T-Stat

Table 3.2.4. Aspen/Pitkin County Airport Operations Center Boiler Data

Boiler	Type	Gas Input (btuh)	Efficiency	Interlocked Controls
B-1 / B-2 / B-3	Natural gas Fired Condensing	450,000	92%	Heat-Timer

Table 3.2.5. Aspen/Pitkin County Airport Operations Center Water Heater Data

Water Heater	Type	Heating	Efficiency	Controls
WH-1	Heating Hot Water Exchanger Tank	Boiler, Heating Hot Water	92% Boiler	Pump with Aqua Stat I

Table 3.2.6. Aspen/Pitkin County Airport Operations Center Pump Data

Pump	System Served	HP	Controls
P-1	Domestic Hot Water Recirc to Building	1/40	Continuous
P-2	Boiler Injection	1/3	Interlocked to Boilers
P-3	Domestic Water Heater Circ to Boilers	1/12	Aqua Stat Sensor in Buffer Tank
P-4	Heater Water Circ	3/4	Interlocked to T-Stats
P-5	Snowmelt Injection	1/25	Interlocked to Snowmelt
P-6	Snowmelt Circ	1/8	Interlocked to Snowmelt
P-7	Radiant Circ	1/3	Interlocked to T-Stats

Table 3.2.7. Aspen/Pitkin County Airport Operations Center Exhaust Fan Data

Exhaust Fan	Area Served	HP	General Exhaust	Source Capture	Controls
EF-1	?	1/2	General	-	?
EF-2	?	1	General	-	?
EF-3	Chemical Storage Hose Drying	1/5	General	-	?
EF-4	Common - Various	1/3	General	-	Continuous
EF-5	2nd Floor Women's Bath, Kitchen	1/5	General	-	Continuous
EF-6	2nd Floor Men's	1/5	General	-	Continuous
EF-7	Exercise Room	1/5	General	-	?
EF-8	Vehicle Exhaust	5	-	SC	Switch
EF-9	Welding Exhaust	1	-	SC	Switch

Table 3.2.8. Aspen/Pitkin County Airport Operations Center Exhaust Reel Data

Exhaust Reels	Area Served	Type of Exhaust
VSR-1	AARF Bay	Vertical Stack Rail Exhaust
HR-1	Boiler Injection	Hose Reel Exhaust
FU-1	Domestic Water Heater Circ to Boilers	Fume Extraction Exhaust

3.2.2 Summary of Potential Mechanical System Improvements for Energy Usage

The system is currently configured where is would pass current energy code requirements and can continue to operate as configured with no code conflicts. Considering the overall goal to phase out the use of fossil fuels in accordance with the State of Colorado's renewable energy standards, the existing mechanical systems will require modifications in the future as the systems operated on natural gas are

phased out. With that said, there are still some improvements that could be made to the system that would decrease your overall annual gas use for the facility in the interim. A summary of the system is listed below:

Central Boiler System: The system is currently configured using three condensing boilers and associated pumps for the central heating system. Although the boiler system appears to be set up to operate as a condensing system that maximizes the system efficiencies, there is room for improvement with today's technologies.

- High efficiency boilers are rated between 90% and 98.5% Annual Fuel Utilization Efficiency) AFUE and the existing boilers for this facility are rated at 92% AFUE. The real potential for energy saving with the boiler system would be to replace the Heat-Timer controls with a better control system with interlocks between boilers for improved load matching capabilities. The central boiler system consists of three individual boilers that are interlocked via the Heat-Timer control system.
- The controls for the boilers are interlocked and operated by an older stand-alone multi-mode Heat-Timer controller. The boilers serve the Indoor fan coils, bay unit heaters, cabinet unit heaters, radiant floor heating zones, snowmelt zones and domestic hot water heating.
- It is unclear as to the exact sequence of operation for the pump controls but there is nothing in the as built drawings that would indicate the pumps are controlled via Variable Frequency Drives (VFD). This should be confirmed on a site visit for clarity on the system operation and the options available for increasing the overall system efficiency.

Cooling / Heating systems for interior occupied spaces: The existing systems serving the interior occupied spaces are served by older DX split systems that contain R-22 refrigerant that is banned and being phased out per federal laws. Technology has improved these types of units and we now can use Variable Refrigerant Flow (VRF) system that load match to the building needs while maximizing system efficiencies. This VRF air-conditioning system configuration uses one outdoor condensing unit with multiple indoor units each with a separate thermostat. The term variable refrigerant flow refers to the ability of the system to control the amount of refrigerant flowing to the multiple evaporators (indoor units), enabling the use of many evaporators of differing capacities and configurations connected to a single condensing unit. The arrangement supplies an individualized comfort control, and simultaneous heating and cooling in different zones. The VRF is a highly efficient system that can load match the equipment output to the building needs and can help owners achieve maximum operating efficiencies.

Heating system for the vehicle bays: All heating systems serving the bays are served by the heating hot water loop from the central boiler plant, heat exchanger and associated pumps. The efficiency for the radiant floor heating system and unit heaters located in the garage is mostly dictated by the operation and control system (to include the pumps) of the boiler plant. The overall energy use of the system can be improved with the methods discussed above and related to the central plan boilers.

Outdoor snowmelt system: The same as the radiant floor heating system located in the vehicle bays, the efficiency for the outdoor snowmelt heating system is mostly dictated by the operation and control system (to include the pumps) of the boiler plant. The overall energy use of the system can be improved with the methods discussed above and related to the central plant boilers. One point of interest needs to be brought up and discussed regarding the set points of the snowmelt system. The as-builts clearly show that the inlet water temperature for the heating equipment and systems were designed using a 130-degree supply temperature except for the snowmelt system. The as-built schedule for the snowmelt system shows the supply water temperature as 180-degrees with a 150-degree return temperature. These temperatures are not consistent with the rest of the equipment schedules nor temperatures required to operate as a condensing boiler at 92% AFUE. The boiler temperature set point needs to be verified for further assessment of this system.

3.3 PLUMBING SYSTEMS

Based on the as-built Plumbing drawings, and existing data and pictures supplied to our office, Kimley-Horn found the following:

3.3.1 Domestic Water Plumbing Fixtures

Below is a summary of the plumbing fixture types, quantities, and baseline on the water usage for each fixture based on the record drawings. Additionally, shown are the recommended flowrates for typical low flow plumbing fixtures.

Table 3.3.1. Aspen/Pitkin County Airport Operations Center Plumbing Fixture Data

Plumbing Fixtures	Quantity	Existing Flowrate	Code Required Flowrate
Laboratory with Faucet	14	1.2 GPM	0.5 GPM
Water Closet with Flush Valve	9	1.6 GPF	1.6 GPF*
Urinal with Flush Valve	3	1.6 GPF	1.0 GPF*
Shower basin with Trim Kit (Includes Combo with Bathtubs)	5	1.5 GPM	2.5 GPM*
Kitchen Sink with Faucet	4	2.5 GPM	2.5 GPM
3-Compartment Sink	1	2.5 GPM**	2.5 GPM
Hand Sink	1	1.5 GPM**	0.5 GPM
Drinking Fountain	1	Standard	Standard
Mop Basin with Faucet	2	Standard	Standard

1.* This is the IPC code requirement with regards to water conservation plumbing fixtures for this building type and application. There is additional option available for different choices in water conservation based on client needs.

2. This flowrate was not able to be verified and is an assumed flowrate base on the age of the building and the codes in effect at that time.**

3.3.2 Summary of Potential Domestic Water Conservation Improvements

The domestic water plumbing fixtures for this building are for the most part within the current code requirements other than the lavatories in the restrooms. With that said, there have been many improvements in plumbing fixtures and lower flowrates. There are many options available for reducing water usage well beyond the code requirements. These options for additional water savings can be discussed to determine whether the potential water saving warrant the capital improvement costs.

3.4 ELECTRICAL SYSTEMS

The electrical service for the AOC is fed by a 75 kVA HCE transformer feeding an exterior, pad-mounted 2000A, 120/208V, 3-phase switchboard. This switchboard feeds several branch panelboards serving the operations center and two modular meter centers serving the residential units.

3.4.1 Lighting Systems

The building lighting consists primarily of fixtures with linear and compact fluorescent sources. Exceptions include metal halide fixtures in the vehicle maintenance bay, high-pressure sodium fixtures on the exterior site, and incandescent lamps on the residential porches and kitchen area. The interior lighting controls system consists of local manual controls except for a lighting contactor in the vehicle bay. The exterior lighting controls system consists of a lighting contactor with photocell and time clock inputs, compliant with current codes. Based on a review of the available as-built drawings, the designed lighting load of the building is approximately 55kVA.

Table 3.4.1. Aspen/Pitkin County Airport Operations Center Lighting Fixture Data

Fixture Type	Fixture Description (Source)	Fixture Quantity (Lamps/Fixture)	Existing Wattage	New Conservation Wattage
H1	Exterior Wall Mounted (F)	1	32	21
H2	Exterior Wall Mounted (F)	1	32	21
H3	Exterior (INC)	3	65	19
H4	Exterior Walkway (HPS)	18	70	25
H5	Exterior Pendant (MH)	63	250	100
H6	Exterior Pendant (MH)	20	250	100
H7	Exterior Pendant (MH)	6	250	100
H8	Exterior Pendant (MH)	5	250	100
F1	Interior 8’ Suspended (F)	12	64	42
F1-B	Interior 4’ Wall Mount (F)	4	128	89
F1-C	Interior 4’ Wall Mount (F)	2	128	89
F1-D	Interior 4’ Wall Mount (F)	4	128	89
F2	Interior 2’ Ceiling Mount (F)	6	50	35
F2-A	Interior 2’ Ceiling Mount (F)	4	50	35
F3	Interior 4’ Wall Mount (F)	17	64	42
F3-B	Interior 4’ Wall Mount (F)	6	64	42
F4	Interior 4’ Wall Mount (F)	5	64	42
F4-A	Interior 2’ Surface Mount (F)	8	34	24
F5	Interior 2’x2’ Troffer (F)	18	51	36
F6	Interior 4’ Surface Mount (F)	7	64	42
F7	Interior DTT Surface Mount (CFL)	14	52	37
F7-A	Interior DTT Surface Mount (CFL)	8	52	37
F7-B	Interior DTT Surface Mount (CFL)	5	52	37
F8	Interior Surface Mount (F)	24	128	89
F9-A	Interior Surface Mount (F)	2	64	42
F10	Interior Wall Mount (F)	4	32	21
F11	Interior Surface 2’x4’ (F)	10	96	67
F14	Interior Surface Mount (F)	4	64	42

Note: New conservation wattages are based the following improvements when replaced with LED: 30% incandescent, 40% metal halide (MH), 70% fluorescent (F), 75% compact fluorescent (CFL), 100% low pressure sodium (LPS), 83% high pressure sodium (HPS).

3.4.2 Generator Systems

A 500kW, 120/208V, 3-phase Cummins diesel generator provides emergency backup for several panels at the site via three automatic transfer switches (ATS), all rated for 120/208V, 3-phase, but two rated for 225A and one rated for 800A. This diesel generator appears to be approximately 15 years old. A typical diesel generator has a life expectancy of 12,000-20,000 hours, depending on frequency of use and consistency of regular maintenance. Pending further inspection, it is anticipated that this generator may soon require major engine or generator servicing.

3.4.3 Airfield Lighting

As-built drawings for the airfield lighting could not be obtained for evaluation. Kimley-Horn is in possession of an AutoCAD base file that has been used on previous projects as well as aerial imagery of the airfield. Based on this and photographs provided by the Client, it is believed that all airfield lighting fixtures have incandescent or halogen sources. While uncertainties remain regarding actual quantities and conditions, an attempt to quantify the airfield lighting has been made based on the available information, resulting in the quantities and wattages shown in Table 3.4.2.

Table 3.4.2. Aspen/Pitkin County Airport Operations Center Airfield Lighting Data

Fixture Type	Fixture Description	Quantity	Existing Wattage	New Conservation Wattage (w/ Heater)
L-861E	Runway End Lights	16	200W	(43W)
L-880	4-Box PAPI	1	1960W	(630W)
L-852D	In Pavement Runway Edge & Threshold Lights	17	105W	(58W)
L-804	Runway Guard Lights	18	200W	(83W)
L-861	Runway Edge Lights	75	120W	(39W)
L-861T	Taxiway Edge Lights	260	45W	34W
L-858(Y/R/L)	RW/TW Guidance & Mandatory Signs*	66	340W	100W
L-858(B)	Runway Distance Remaining Signs	7	300W	100W

1. * The runway sign sizes and quantities were not verified for this report. As Kimley-Horn assumes most common size being three-module, the wattage for this size is used for comparison.
2. ** Exact quantities were not able to be verified and are estimated based on aerial imagery of the site.
3. Wattages in this table include isolation transformer loads.

3.4.4 Summary of Potential Electrical Conservation Improvements

Areas of this building for potential energy conservation improvements include replacement of lighting fixtures with LED at the AOC and on the airfield which would result in energy usage savings. It is noted here that the load reduction on the airfield lighting circuits may require replacement of the existing constant current regulators to match the output of each to the new load. This site was considering in

conjunction with the air terminal building for the potential to install solar photovoltaic systems in the ASE Net Zero Solar Memo. Again, for reference, this memorandum is attached to this report as Appendix 3.

4.0 PCPW – ADMINISTRATION AND MAINTENANCE BUILDINGS

The Pitkin County Public Works Campus covers an area of approximately 5 acres and consists of several buildings of interest for this report, including the Administration Building and Maintenance Building. The former is made up of two stories of office space for PCPW staff and high bay parking garages for fleet vehicles; the latter is a single-story building with primarily high bay fleet vehicle maintenance areas. It is estimated that the Administration Building was constructed between 1991 and 1992 and the Maintenance Building between 1995 and 1996. Our assessment and energy usage analysis for this site will be limited to addressing the following building elements:

- Energy Usage Data
- Mechanical
- Plumbing
- Electrical

4.1 ENERGY USAGE DATA

On the Pitkin County Public Works Campus, there are several additional buildings which are connected to the same utility circuit, including the Pitkin County Animal Shelter, a residential housing unit herein referred to as the Cabin, and three buildings owned by the Colorado Department of Transportation (CDOT) including an unconditioned sand storage facility. From a utility perspective, the feasibility of segregating the electrical load contributions of these buildings when microgrid improvements are installed is doubtful without extensive and intrusive redesign of the existing utility circuits. For this reason, this section will address high level energy usage at these other sites as well.

4.1.1 Electricity

Based on the electricity metering data provided by HCE, Kimley-Horn found the following:

The meter serving the buildings at this site saw a peak electricity demand of 40 kW, average electricity demand of 1.98 kW, and an annual energy consumption of 17,363 kWh.

The meter serving the EV Charging Station at this site saw a peak electricity demand of 46 kW, average electricity demand of 2.07 kW, and an annual energy consumption of 18,210 kWh.

The meter serving the PV arrays at this site saw a peak electricity supply of 70 kW, average electricity supply of 6.12 kW, and an annual energy generation of 53,787 kWh.

The three meters serving the Animal Shelter at this site saw a peak electricity demand of 20 kW, average electricity demand of 6.02 kW, and an annual energy consumption of 52,876 kWh.

The meter serving the CDOT Office saw a peak electricity demand of 5.9 kW, average electricity demand of 1.8 kW, and an annual energy consumption of 15,918 kWh.

The meter serving the CDOT Sand Facility saw a peak electricity demand of 1.8 kW, average electricity demand of 0.29 kW, and an annual energy consumption of 2,516 kWh. The meter serving the Cabin saw a peak electricity demand of 2.8 kW, average electricity demand of 0.94 kW, and an annual energy consumption of 8,228 kWh.

One additional entry shows the aggregated usage values for all buildings on the Pitkin County Public Works campus, with and without the PV system generation. Note that the peak demand at the campus is not affected by the solar, indicating that the peak demand is not concurrent with the peak PV generation.

This information is also provided in Table 4.1.1 for reference.

Table 4.1.1. PCPW Campus Electric Metering Data

Meter Number	Holy Cross Energy Description	Peak Demand / Average Demand	Energy Usage – Consumption or (Generation)
912313	PitCO Service Center	40 kW / 1.98 kW	17,363 kWh
910878	PitCO EV	46 kW / 2.07 kW	18,210 kWh
910256	PitCO Gen PV	(70 kW) / (6.12 kW)	(53,787 kWh)
911579	Animal Shelter (3 meters)	20 kW / 6.02 kW	52,876 kWh
811137	CDOT Office	5.9 kW / 46.6 kW	17,009 kWh
811133	CDOT Sand Facility	1.8 kW / 0.29 kW	2,516 kWh
237001	Cabin	2.8 kW / 0.94 kW	8,228 kWh
TOTAL	PCPW Campus (excluding PV) PCPW Campus (including PV)	57 kW / 12 kW 57 kW / 6.0 kW	106,884 kWh 53,096 kWh
***Note: Values in parenthesis indicated negative demand values or generation.**			

4.1.2 Natural Gas

Based on the utility gas bill data provided by the Client, Kimley-Horn found the following:

The meter serving the main service center building at this site saw an annual gas consumption of 17,718 Therms.

Metering for the other buildings on the campus was not available for analysis at this time. This information is also provided in Table 4.1.2 for reference.

Table 4.1.2. PCPW Campus Gas Usage Data

Location Description	Annual Consumption
PitCO Service Center	17,718 Therms
Animal Shelter (3 meters)	Unverified

CDOT Office	Unverified
CDOT Sand Facility	Unverified
Cabin	Unverified

4.2 MECHANICAL SYSTEMS

Considering there are no as-built drawings for the mechanical systems, the following summary of the existing mechanical systems is based on the data and pictures supplied to our office, Kimley-Horn found the following information on the mechanical systems throughout the building. Below is a summary of these existing systems:

4.2.1 Heating, Ventilation, and Air Conditioning (HVAC)

PC Administration Building Vehicle Wash System: The unit is a self-contained gas fired vehicle pressure washer system with an integrated gas fired boiler and operated by user as needed.

PC Administration Building Cooling / Heating systems for interior office spaces: The existing cooling systems serving the building is a split system type air conditioning system consisting of one indoor gas fired furnace with cooling coil unit connected to an external condensing unit. The indoor coil and outdoor condenser are connected through copper refrigeration tubing and electrical cabling for the local controls. The existing condensing unit's type of refrigerant and rated SEER are unknown currently. There is additionally a dedicated Mitsubishi Mini Split System with air conditioning only. This appears to serve a data room but could not be verified.

Heating and Ventilation Systems for the Admin and Maintenance Building bays: The vehicle bays have individual heating units and exhaust fans for these spaces. All heating systems serving the bays are gas fired type units. Most are the infrared tube style heaters, although there is also gas fired forced air units' heaters used in various places.

Table 4.2.1. Administration and Maintenance Building Fan Coil and Condensing Unit Data

Fan Coil	Area Served	Heating	Efficiency	Cooling	Efficiency	Controls
FC-1/CU-1	Admin Building - Office	Gas Fired	80% AFUE	DX	Unknown	T-Stat
FC-2/CU-2	Admin Building – Data Room (TBD)	N/A	N/A	DX	12 SEER	T-Stat

Table 4.2.2. Administration and Maintenance Building Dedicated Outside Air System Data

Dedicated Outside Air System (DOAS)	Area Served	Heating	Gas Input	HP	Controls	Remarks

DOAS's	Maintenance Building	Gas Fired Air handler	665,000	7.5	?	Quantity Unknown

Table 4.2.3. Administration and Maintenance Building Unit Heater Data

Unit Heaters	Area Served	Heating	Efficiency	HP	Controls	Remarks
UH's	Admin Building	Gas Fired Infrared Tube Heater	TBD	Fractional	T-Stat	Quantity Unknown
UH's	Maintenance Building	Gas Fired Infrared Tube Heater	TBD	Fractional	T-Stat	Quantity Unknown
UH's	Maintenance Building	Gas Fired Infrared Tube Heater	TBD	Fractional	T-Stat	Quantity Unknown

Table 4.2.4. Administration and Maintenance Building Water Heater Data

Water Heater	Type	Heating	Efficiency	Controls
WH-1	Admin Building – Hot Water Heater	Electric Immersion Heating Element	-	Auto
WH-1	Maintenance Building – Hot Water Heater	Unknown	-	Unknown

Table 4.2.5. Administration and Maintenance Building Exhaust Fan Data

Exhaust Fan	Area Served	HP	General Exhaust	Source Capture	Controls	Remarks
EF's	Admin Building	Unknown	General	N/A	?	Quantity Unknown
EF's	Maintenance Building	Unknown	General	N/A	?	Quantity Unknown

4.2.2 Summary of Potential Mechanical System Improvements for Energy Usage

The system is currently configured where is would pass current energy code requirements and can continue to operate as configured with no code conflicts. Considering the overall goal to phase out the use of fossil fuels in accordance with the State of Colorado's renewable energy standards, the existing mechanical systems will require modifications in the future as the systems operated on natural gas are phased out. A summary of the system is listed below:

Cooling / Heating systems for interior occupied spaces: The existing systems consist of one furnace with a DX split system for cooling serving the interior occupied spaces and a second mini split system, is likely, serving an IT closet or data room. There was no as-built information and therefore this information will need to be verified by onsite staff. Without an as-built drawing of the interior spaces it is hard to determine if a VRF system as discussed above for the Ops Building would work for this facility. It would appear the space is served by an older single furnace with DX cooling. For this building, a single zone VRF system

could be used to help maximize the system efficiencies by load matching the building. Additionally, this VRF system could be configured with a new high efficiency furnace to minimize the overall energy usage for the building. The indoor mini-split system, the area it serves, and associated loads will need to be evaluated to determine whether this temperature control zone could be tied in with the other VRF system serving the main occupied space or if it will require a dedicated Air Conditioning (AC) unit.

Heating system for the vehicle bays: All heating systems serving the bays are gas fired heaters. There is a mix of individual forced air unit heaters and infrared tube heaters. The unit heater is not typically the best way to heat these types of spaces, yet the used of the tube heaters is one of the better ways to heat these spaces. Unlike the forced air type of a unit heater that just blows heated air, the tube heater radiates which in turn gets into the mass of the building acting as energy storage for heat. When a bay door is opened and then closed during winter conditions, the space gets back to the set point temperature much quicker than the forced air units. With forced air units, when the bay doors are opened then the mass of the heated air is lost to the outdoors and the heaters must work harder to get the space back to the set point temperature.

4.3 PLUMBING SYSTEMS

There were no clear as-builts of the Plumbing systems. Therefore, Kimley-Horn has assumed the following with regards to the plumbing systems:

4.3.1 Domestic Water Plumbing Fixtures

Below is a summary of the assumed plumbing fixture types that will be found in the Admin and Maintenance Buildings. There were no as-built drawings for these buildings and therefore, the baseline on the water usage for each fixture based on plumbing fixtures used in other buildings of the facility. Additionally, shown is the recommended flowrates for typical low flow plumbing fixtures.

Table 4.3.1. Administration and Maintenance Building Plumbing Fixture Data

Plumbing Fixtures	Quantity	Existing Flowrate	Code Required Flowrate
Laboratory with Faucet	?	1.2 GPM	0.5 GPM
Water Closet with Flush Valve	?	1.6 GPF	1.6 GPF*
Urinal with Flush Valve	?	1.6 GPF	1.0 GPF*
Drinking Fountain	?	Standard	Standard
Mop Basin with Faucet	?	Standard	Standard

1.* This is the IPC code requirement with regards to water conservation plumbing fixtures for this building type and application. There is additional option available for different choices in water conservation based on client needs.

2. This flowrate was not able to be verified and is an assumed flowrate base on the age of the building and the codes in effect at that time.**

4.3.2 Summary of Potential Domestic Water Conservation Improvements

The same as the Ops Building, the domestic water plumbing fixtures are for the most part within the current code requirements other than the lavatories in the restrooms. Options for additional water savings can be discussed to determine whether the potential water saving warrant the capital improvement costs.

4.4 ELECTRICAL SYSTEMS

The electrical service for the PCPW Campus is fed by a 75 kVA HCE transformer feeding an exterior, pad-mounted 1000A, 120/208V, 3-phase switchboard. This switchboard contains two service disconnects: one rated for 600A, 120/208V, 3-phase for the maintenance building and one rated for 400A, 120/208V, 3-phase for the administration building. A 500kW, 120/208V, 3-phase diesel generator provides emergency backup for the entire campus via an 1000A ATS rated for 120/208V, 3-phase.

The Administration Building electrical loads are fed entirely from two panels: a 300A, 120/208V, 3-phase panelboard labelled 'VA' and a 225A, 120/208V, 3-phase panelboard labelled 'VB'.

The Maintenance Building electrical loads are fed from an 800A, 120/208V, 3-phase distribution panelboard labelled 'MA'. In addition to various shop equipment loads, this panelboard provides power for all of the lighting loads in the building. It also subfeeds a 225A, 120/208V, 3-phase panelboard labelled 'MB', as well as another 125A, 120/208V, 3-phase panelboard labelled 'MC'.

4.4.1 Lighting Systems

The administration building lighting consists of fixtures with a mix of linear fluorescent and LED sources. The interior lighting controls system consists of local manual controls. The exterior lighting controls system consists of a lighting contactor with photocell and time clock inputs, compliant with current codes.

The following information was gathered for these two buildings based on assessments performed by the team, comprised here in Table 4.4.1.

Table 4.4.1. Administration and Maintenance Building Lighting Fixture Data

Fixture Type	Fixture Description (Source)	Fixture Quantity (Lights/Fixture)	Existing Wattage	New Conservation Wattage
ADMINISTRATION BUILDING				
(BLANK)	Linear Pendant (LED)	19	Unverified	N/A
(BLANK)	Recessed Troffer (LED)	2	Unverified	N/A
(BLANK)	Recessed Downlight (F)	35	56W	39W
MAINTENANCE BUILDING				
(BLANK)	Wall Pack (LED)	9	Unverified	N/A
(BLANK)	Linear Pendant (F)	13	168W	120W
Note: New conservation wattages are based the following improvements when replaced with LED: 30% incandescent, 40% metal halide (MH), 70% fluorescent (F), 75% compact fluorescent (CFL), 100% low pressure sodium (LPS), 83% high pressure sodium (HPS).				

4.4.2 Photovoltaic (PV) Generation Systems

In 2017, the PCPW Administration and Maintenance Buildings were equipped with a 104.5 kW roof mounted, grid-tied photovoltaic solar system. The approximately 6,335 square feet of solar panels are combined through seven inverters which are housed in the Maintenance Building. These feed into an AC combiner which has a dedicated connection to the utility via a 350A, 120/208V, 3-phase disconnect on

the utility switch on the PCPW Campus. A typical life expectancy for solar PV panels is 20 years. However, PCPW may expect an extended life cycle due to the favorable cooler annual temperatures. Seasonal reductions in solar production due to snow cover on the panels can be mitigated with electrical heat tape and can be evaluated as a potential improvement measure.

4.4.3 Electric Vehicle (EV) Charging Systems

The PCPW Campus is equipped to three BTC Power Level 2 EV charging stations. Two of the charging stations are rated for 208-240V, 40A input and the third for 208-240V, 160A input. These EV charging stations were manufactured in 2015. It is noted in this report that the software on at least one of these EV chargers is in need of an update. These EV charging stations are currently in use by PCPW to charge their electrified fleet vehicles.

4.4.4 Generator Systems

A 100kW/125kVA, 120/208V, 3-phase Cummins diesel generator provides emergency backup at the site. This diesel generator appears to be approximately 15 years old. A typical diesel generator has a life expectancy of 12,000-20,000 hours, depending on frequency of use and consistency of regular maintenance. Pending further inspection, it is anticipated that this generator may be due for some major engine or generator servicing.

4.4.5 Summary of Potential Electrical Conservation Improvements

Areas of these buildings for potential energy conservation improvements include replacement of lighting fixtures with LED. There appear to be additional areas where ground mounted and/or parking shade structure solar PV generation could be deployed to augment the existing roof-top solar. The PCPW Campus also presents an ideal and centralized location to deploy a microgrid connection point to support the continued operation of emergency, law enforcement, and CDOT operations. Additionally, with sufficient solar capacity available, the existing gasified equipment could be replaced with equivalent electrified equipment and reduce the carbon footprint of the building and operations.

5.0 RFTA ASPEN MAINTENANCE FACILITY (AMF)

The RFTA Aspen Maintenance Facility (AMF), one of two primary facilities, is a 62,404 square-foot, single-story building used to maintain, store and operate a fleet of roughly 100 transit buses for the 70-mile RFTA service region. The AMF includes office space for administrative functions comprising approximately 12,200 square feet of the total area.

In 2017, PCD Engineering Services performed a comprehensive commissioning report of the RFTA AMF. Kimley-Horn will reference this report in the foregoing assessment. Our assessment and energy usage analysis for this site will be limited to addressing the following building elements:

- Energy Usage Data
- Mechanical
- Plumbing

- Electrical

5.1 ENERGY USAGE DATA

Based on the electricity metering data provided by HCE, Kimley-Horn found the following:

5.1.1 Electricity

The meter serving the building at this site saw a peak electricity demand of 157 kW, average electricity demand of 115 kW, and an annual energy consumption of 1,012,135 GWh.

The dedicated Holy Cross Energy meter serving the depot chargers for the battery electric buses (BEBs) saw a peak electricity demand of 535 kW, average electricity demand of 41.5 kW, and an annual energy consumption of 364,698 kWh.

This information is also provided in Table 5.1.1 for reference.

Table 5.1.1. RFTA Aspen Maintenance Facility Electric Metering Data

Energy Usage	Peak Demand	Average Demand	Annual Consumption
RFTA Service Center	157 kW	115 kW	1,012,135 GWh
RFTA BEB	535 kW	41.5 kW	364,698 kWh

5.1.2 Natural Gas

Based on the utility gas bill data provided by the Client, Kimley-Horn found the following:

The meter serving the building at this site saw an annual gas consumption of 560 Therms.

This information is also provided in Table 5.1.2 for reference.

Table 5.1.2. RFTA Aspen Maintenance Facility Gas Usage Data

Location Description	Annual Consumption
RFTA Aspen Maintenance Facility	560 Therms

5.2 MECHANICAL SYSTEMS

Based on the as-built mechanical drawings, and existing data and pictures provided to our office, Kimley-Horn found the following information on the mechanical systems throughout the building. Below is a summary of these existing systems:

Central Boiler System: The central boiler system consists of three boilers. Two of the boilers are 92% efficient gas-fired condensing boilers and one is a waste oil-fired boiler that are interlocked and operated

by the building Energy Management System (EMS). The boilers serve the indoor cabinet unit heaters, radiant floor heating zones, snowmelt zones and domestic hot water heating.

Central Ground Source Heat Pump (GSHP): The ground source heat pump is piped from the geo-thermal bed under part of the building into the mechanical room to the Climate Master GSHP. This unit is piped into the heat and cooling piping loops that run throughout the building and supply both heating and cooling for different operations of the central plant system. This unit also supplies the water loop to the indoor GSHP air handling units.

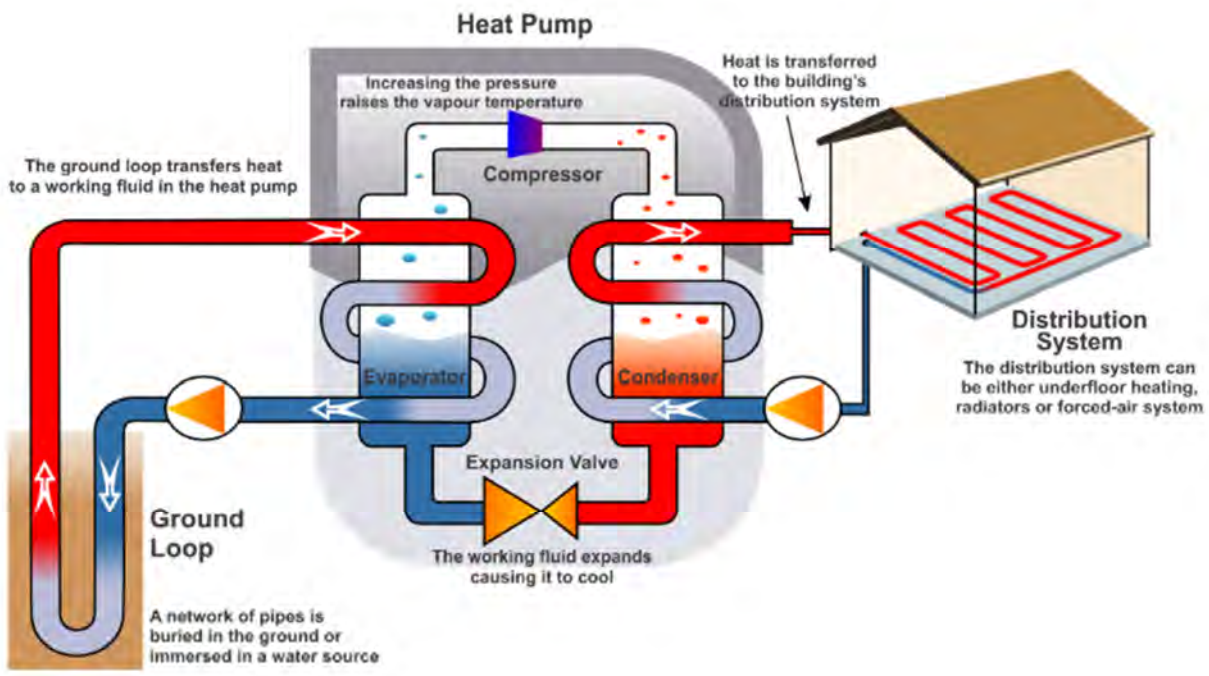

Cooling / Heating Systems Interior Occupied Spaces: The existing cooling systems serving the facility are GSHP forced air units that have an internal two stage compressor for cooling and is connected to the Central GSHP unit for the heat rejection from the compressor. These existing GSHP air handling units are rated between 27 and 31 SEER depending on exact operating conditions.

Heating System for Vehicle Bays: The vehicle bays have heating and energy recovery ventilation (ERV) units throughout various strategic locations. The heating systems serving the bays that were a part of the original building are gas-fired infrared radiant tube heaters. The bays that were added as an addition in remodel phases 3 and 4 have radiant-heated floor serving these spaces.

Snowmelt System: The East facing snowmelt zones are the only outdoor areas being served by the central boiler plant. All snowmelt zone piping is served by the heating hot water loop from the central boiler plant, heat exchanger and system pumps.

The tables below are a listing of the existing equipment that were identified between the information shown in the as-built drawings and the initial client site walk-thru and assessment checklist information that was obtained.

5.2.1 Heating, Ventilation, and Air-Conditioning (HVAC)

Table 5.2.1. RFTA Bus Maintenance Facility Gas Fired IR Heater Data

Gas Fired IR Heater	Quantity	Heating (MBH)	Controls
IRH-1	6	80	T-Stat
IRH-2	3	80	T-Stat
IRH-3	2	130	T-Stat
IRH-4	1	155	T-Stat

Table 5.2.2. RFTA Bus Maintenance Facility Gas Unit Heater Data

Gas Unit Heater	Area Served	Heating Input (MBH)	Output (MBH)	HP	Controls
UH-1	140A Boiler Room	75			T-Stat
UH-2	140B Generator Room	75			T-Stat
UH-3	116 Bus Storage	250			T-Stat
UH-4	116 Bus Storage	250			T-Stat
UH-5	129 Parts Storage	250			T-Stat
UH-14	134 Lube Room	7			T-Stat
UH-15	116 Bus Storage	250	147	1/3	T-Stat

Table 5.2.3. RFTA Bus Maintenance Facility Gas Fired Air Curtain Data

Gas Fired Air Curtain	Area Served	HP	Input (MBH)	Controls
GAC-1	135 Fuel Line Inspection	(2) 3	500	?

Table 5.2.4. RFTA Bus Maintenance Facility Ground Source HP (Water to Air) Data

Ground Source HP (H20 to Air)	Area Served	HP	EER	COP	Controls
GSHP/2-1	Dispatch	1/2	14.4	4.33	T-Stat
GSHP/2-2	Lounge	1	14.5	4.19	T-Stat
GSHP/2-3	108A Office	1/2	14.4	4.33	T-Stat
GSHP/2-4	108B IT Room	1	13.6	3.98	T-Stat
GSHP/2-5	109/111 Office	1/2	14.2	4.24	T-Stat

GSHP/2-6	112 Clerical	1/2	14.4	4.33	T-Stat
GSHP/4-1	139 Office	1/25	14.4	3.50	T-Stat
GSHP/5-1	Tools/Office	1/2	14.4	4.33	T-Stat
GSHP/5-2	124 Office	1/25	14.4	3.50	T-Stat
GSHP/5-3	137A, 137B, 137C	1/2	14.2	4.24	T-Stat
GSHP/5-4	202 Lounge	1	13.6	3.98	T-Stat

Table 5.2.5. RFTA Bus Maintenance Facility Ground Source HP (Water to Water) Data

Ground Source HP (H2O to H2O)	Location	COP	Cooling	Controls
WWHP-1	Mech Room	3.70	R410A	CXM to Match BAS

Table 5.2.6. RFTA Bus Maintenance Facility Heat Exchanger Data

Heat Exchanger	Area Served	Heating	Efficiency
SMHX-1	Snow Melt	Boiler, Hot Water 20% Glycol	83%

Table 5.2.7. RFTA Bus Maintenance Facility Electric Water Heater Data

Electric Water Heater	Location	KW Input	Storage (Gal)
EWH-1	Mezzanine Mech Room	4.5	40
EWH-2	Second Floor Supply Room	4.5	40

Table 5.2.8. RFTA Bus Maintenance Facility Cabinet Heater Data

Cabinet Heater	Area Served	Heating (MBH)	HP
CH-3	103 Vestibule	14	1/6
CH-4	113 Vestibule	14	1/6
CH-5	133 Vestibule	14	1/6

Table 5.2.9. RFTA Bus Maintenance Facility Electric Cabinet Heater Data

Electric Cabinet Heater	Area Served	KW	Controls
ECH-105	105 Men's	1.5	Unit Mounted T-Stat
ECH-107	107 Women's	1.5	Unit Mounted T-Stat

Table 5.2.10. RFTA Bus Maintenance Facility Boiler Data

Boiler	Type	Gas Input (btuh)	Efficiency	Interlocked Controls

B-1 / B-2	Firetube, Condensing	2,000,000	92%	BAS
B-3	Waste-Oil Storage	500,000	85%	BAS

Table 5.2.11. RFTA Bus Maintenance Facility Pump Data

Pump	System Served	HP	Controls
P-1A	Condenser Water Secondary	5	BAS
P-1B	Condenser Water Secondary	5	BAS
P-2	Condenser Water Injection	1	BAS
P-3A	Ground Loop	5	BAS
P-3B	Ground Loop	5	BAS
P-B1	Heating Water-Primary	1	BAS
P-B2	Heating Water-Primary	1	BAS
P-B3	Heating Water-Primary	1	BAS
P-4	Slab Heating Pit	1/6	BAS
P-5	Slab Heating North	¾	BAS
P-6	Slab Heating South	¾	Bas
P-7	Heating Water Secondary	5	BAS
P-8	Provided by boiler	-	-
P-9	Snowmelt Secondary	2	BAS
P-10	Snowmelt Area East	7.5	BAS
P-11	Snowmelt Area North	2	BAS
P-12	Bay Tank Waste Oil	1/3	BAS
P-13	Radiant Floor	2	BAS

Table 5.2.12. RFTA Bus Maintenance Facility Exhaust Fan Data

Exhaust Fan	Area Served	HP	General Exhaust	Source Capture	Controls
EF-4	Paint Spray Booth	7.5	General	-	?
EF-6	Electric Room East	¼	General	-	?
EF-7	Battery Room	1/3	General	-	?
EF-8	Tail Pipe	3	General	-	?
EF-9	Hot Dip Tank	1/4	General	-	?
EF-10	Electric Room West	1/6	General	-	?
EF-11	New Bus Storage	1	General	-	?
EF-12	New Bus Storage	1	General	-	?

Table 5.2.13. RFTA Bus Maintenance Facility Energy Recovery Ventilator Data

Energy Recovery Ventilator	Area Served	Supply/Exhaust HP	Summer/Winter HR Efficiency	Furnace Input MBH	Controls

EVR-1	Bus Storage	15/20	N/A / 79%	400 Indirect	?
EVR-2	South Office Area	¾ / ¾	92% / 92%	?	?
EVR-3	Vehicle Repair	5/7.5	78% / 78%	250 Indirect	?
EVR-4	Bus Wash Area	5/5	77% / 77%	250 Indirect	?
EVR-5	Unit Repair/Parts Storage	5/3	86% / 86%	250 Indirect	
EVR-6	New Bus Storage	10/10	N/A / 79%	800 Indirect	
EVR-7	New Bus Storage	10/10	N/A / 79%	800 Indirect	

5.2.2 Summary of Potential Mechanical System Improvements for Energy Usage

Following the 2012 energy assessment, the building was upgraded and the entire HVAC system for the facility was improved. Although it is difficult to understand the exact operation of the system, the mechanical system installed during the improvements through phase 4 were designed with energy efficiency in mind. Because some of the sequence of operations with regards to the ground source system is not that clear, it would be necessary to meet with the maintenance staff to have a better understanding of the overall system operation for the facility and review how the systems have been working since the upgrades were completed.

Currently the waste oil incinerator boiler is used for the lead boiler that serves the building heating system. Because of this, the gas fired boiler is rarely in operation which in turn shows that this facility uses a minimal amount of gas on an annual basis. This is not a fully accurate view of energy use since the total quantity of waste oil used on an annual basis has been difficult to verify. the overall goal to phase out the use of fossil fuels in accordance with the State of Colorado's renewable energy standards. This aspect of the design will need to be further discussed with the airport staff to understand how the use of used oil falls into the states renewable goals and the facility function.

5.3 PLUMBING SYSTEMS

There were no clear as-builts of the Plumbing systems. Therefore, Kimley-Horn has assumed the following with regards to the plumbing systems:

5.3.1 Domestic Water Plumbing Fixtures

Below is a summary of the assumed plumbing fixture types that will be found in the Administrative and Maintenance Buildings. There were no as-built drawings for this building and therefore, the baseline on the water usage for each fixture based on plumbing fixtures used in other buildings of the facility. Additionally, shown are the recommended flowrates for typical low flow plumbing fixtures.

Table 5.3.1. RFTA Bus Maintenance Facility Plumbing Fixture Data

Plumbing Fixtures	Quantity	Existing Flowrate	Code Required Flowrate
Laboratory with Faucet	5	1.2 GPM**	0.5 GPM
Water Closet with Flush Valve	5	1.6 GPM**	1.6 GPF*
Urinal with Flush Valve	2	1.6 GPM**	1.0 GPF*

Mop Basin with Faucet	1	Standard	Standard
1.* This is the IPC code requirement with regards to water conservation plumbing fixtures for this building type and application. There is additional option available for different choices in water conservation based on client needs. **2.** This flowrate was not able to be verified and is an assumed flowrate base on the age of the building and the codes in effect at that time.**			

5.4 ELECTRICAL SYSTEMS

The electrical service for the RFTA AMF is fed by a 300 kVA HCE transformer feeding an exterior, pad-mounted 1200A, 277/480V, 3-phase switchboard. This switchboard feeds two distribution panelboards, both rated for 600A, 277/480V, 3-phase and one of which is backed up with a standby generator via an 600A, 277/480V, 3-phase, 4-pole ATS.

5.4.1 Lighting Systems

The building lighting consists primarily of fixtures with linear fluorescent sources, interior fixtures, and exterior lighting with metal halide sources. The interior lighting controls system consists of a lighting control panel with photocell, time clock, and local manual controls, which were commissioned in December 2016. The exterior lighting controls system consists of a lighting contactor with photocell and time clock inputs, compliant with current codes. Based on a review of the available as-built drawings, the designed lighting load of the building is approximately 61.4 kVA.

Table 5.4.1. RFTA Bus Maintenance Facility Lighting Fixture Data

Fixture Type	Fixture Description (Source)	Quantity	Existing Wattage	New Conservation Wattage
BB1	Exterior Pole Mounted (MH)	14	58	23
BB3/BB3HS	Exterior Pole Mounted (MH)	7	180	72
BB4	Exterior Pole Mounted (MH)	1	180	72
CB	Interior 4’ Wraparound (F)	6	32	22
F2	Interior 2’x4’ Troffer (F)	2	64	45
P1	Interior 2’x4’ Troffer (F)	85	64	45
P2	Interior 4’ Strip (F)	625	64	45
P3	Interior 4’ Strip (F)	18	32	22
W1	Exterior Wall Pack (MH)	17	58	23
W2	Exterior Wall Pack (MH)	2	58	23
W5	Stair Light (F)	1	64	45
Note: New conservation wattages are based the following improvements when replaced with LED: 30% incandescent, 40% metal halide (MH), 70% fluorescent (F), 75% compact fluorescent (CFL), 100% low pressure sodium (LPS), 83% high pressure sodium (HPS).				

5.4.2 PV Generation Systems

The existing building is not equipped with a solar power generation system; however, a feasibility study to install roof top solar PV was performed in December 2019. This study addressed the feasibility of two design options for installation on the existing roof. A summary of the projections of that study are included here in Table 5.4.2. For the complete study, please refer to Appendix 4.

Table 5.4.2. RFTA Bus Maintenance Roof Top Solar PV Feasibility Study Data

Design Option	System Size	Annual Generation	Percentage of Annual Energy Consumption	Estimated Construction Cost	Cost Per Watt
1	300 kW	393,909 kWh	40%	$600,000	$2.00
2	257 kW	391,308 kWh	40%	$591,100	$2.30

5.4.3 EV Charging Systems

The facility is equipped with four ABB 150-kW electric bus dual charging stations.

5.4.4 Generator Systems

A 400kW, 277/480V, 3-phase diesel generator provides emergency backup at the site. This diesel generator appears to be approximately 19 years old. A typical diesel generator has a life expectancy of 12,000-20,000 hours, depending on frequency of use and consistency of regular maintenance. Pending further inspection, it is anticipated that this generator may be due for some major engine or generator servicing.

5.4.5 Summary of Potential Electrical Conservation Improvements

Areas of these buildings for potential energy conservation improvements include replacement of lighting fixtures with LED. Based on the aforementioned solar report, roof-top and/or parking shade structure solar PV generation could be deployed pending a structural analysis of the building and related improvements to the electrical system. The RFTA Aspen Maintenance Facility presents an ideal and centralized location to deploy a microgrid connection point to support the continued operation of mass transit operations. Additionally, with sufficient solar capacity available, the existing gasified equipment could be replaced with equivalent electrified equipment and reduce the carbon footprint of the building and operations.

6.0 RFTA BRUSH CREEK BUS RAPID TRANSIT (BRT) STATION & PARK-N-RIDE

The Brush Creek Bus Rapid Transit (BRT) Station and Park-n-Ride serves as a strategic transit hub and commuter parking facility in the Roaring Fork Valley. By way of information, the intercept lot, including the bus platform, pull-thru lanes, and commuter lot, is owned by CDOT. RFTA leases the vicinity of the bus platform and pull-thru lanes; the City of Aspen and RFTA have a joint renewable five-year lease

agreement of the commuter lot. Based on the provided as-builts, the facilities at this site were constructed in 2013. Our assessment and energy usage analysis for this site will be limited to addressing the following building elements:

- Energy Usage Data
- Electrical

6.1 ENERGY USAGE DATA

Based on the electricity metering data provided by HCE, Kimley-Horn found the following:

6.1.1 Electricity

The meter serving the transit station at this site saw a peak electricity demand of 19 kW, average electricity demand of 4.05 kW, and an annual energy consumption of 35,602 kWh.

This information is also provided in Table 6.1.1 for reference.

Table 6.1.1. RFTA Brush Creek Intercept Lot Electric Metering Data

Location	Peak Demand	Average Demand	Annual Consumption
RFTA Transit Station	19 kW	4.50 kW	35,602 kWh

6.2 ELECTRICAL DISTRIBUTION

The electrical service for the BRT is fed by a 50 kVA HCE transformer feeding a 400A and 300A pedestal, both at 120/240V, 1-phase. This pedestal feeds the electrical loads at the transit station. There are four (4) panelboards which feed the existing loads at this site: one (1) 400A panelboard, two (2) 300A panelboard, and one (1) 200A panelboard.

6.2.1 Snowmelt System

An electric snowmelt system is installed and fed from multiple pedestals at and within the transit hub platform which operates at 120/240V, 1-phase. This system accounts for 56 kVA of electrical load.

6.2.2 Infrared Heating

Two (2) electric infrared heaters are installed within the sheltered waiting area on the transit hub platform. Each heater operates at 120V, 1-phase and produces 1500W of heating. The heater is controlled by an adjustable timer switch to a maximum of 10 minutes.

6.2.3 Lighting Systems

The intercept lot lighting consists of metal halide sourced area lights and LED sourced fixtures at the transit hub platform.

The lighting controls system consists of occupancy and photocell control inputs such that the exterior lighting at the parking lot and transit hub platform operate from dusk to dawn while the lighting interior to the sheltered waiting area is controlled by occupancy sensors. Based on this information, the lighting controls comply with the current codes.

Table 6.2.1. RFTA Brush Creek Intercept Lot Lighting Fixture Data

Fixture Type	Fixture Description (Source)	Quantity	Existing Wattage	New Conservation Wattage
A2	2' Linear Adjustable (LED)	10	12	N/A
A3	2' Linear Adjustable (LED)	Unverified	36	N/A
A4	2' Linear Adjustable (LED)	Unverified	48	N/A
A5	Post Top Area Light (MH)	Unverified	175	70
A6	Post Top Area Light (MH)	Unverified	150	60
A7	Post Top Area Light (MH)	Unverified	130	52
B	Tape Light (LED)	Unverified	2W/ft	N/A
C	Custom Icon Luminaire (LED)	Unverified	12W/ft	N/A
T1	Surface Downlight (LED)	4	6	N/A
T2	Surface Downlight (LED)	7	6	N/A
Note: New conservation wattages are based the following improvements when replaced with LED: 30% incandescent,40% metal halide (MH), 70% fluorescent (F), 75% compact fluorescent (CFL), 100% low pressure sodium (LPS), 83% high pressure sodium (HPS).				

6.2.4 Summary of Potential Electrical Conservation Improvements

Areas of these buildings for potential energy conservation improvements include replacement of lighting fixtures with LED. Parking areas present an ideal location to deploy parking canopy structure mounted solar PV generation. The location has been considered by HCE and RFTA for future development; however, neither entity has sanctioned an official pursuit. The transit station also presents an ideal and centralized location to deploy a microgrid connection point in conjunction with the continued operation of mass transit operations.

7.0 HCE ASPEN OFFICE

The existing office building is a two-story mixed-use office and residential building with a garage and some ground level commercial office space. Based on information provided by HCE, the building was constructed between the years 1980 and 1981. Our assessment and energy usage analysis for this site will be limited to addressing the following building elements:

- Energy Usage Data
- Mechanical
- Plumbing
- Electrical

7.1 ENERGY USAGE DATA

Based on the electricity metering data provided by HCE, Kimley-Horn found the following:

7.1.1 Electricity

The meter serving the HCE Aspen Office at this site saw a peak electricity demand of 25 kW, average electricity demand of 11.13 kW, and an annual energy consumption of 97,762 kWh.

The meter serving the HCE Aspen Office Residential Suite A at this site saw a peak electricity demand of 7 kW, average electricity demand of 0.74 kW, and an annual energy consumption of 6,499 kWh.

The meter serving the HCE Aspen Office Residential Suite B at this site saw a peak electricity demand of 6 kW, average electricity demand of 0.95 kW, and an annual energy consumption of 8,304 kWh.

This information is also provided in Table 7.1.1 for reference.

Table 7.1.1. HCE Aspen Office Electric Metering Data

Location	Peak Demand	Average Demand	Annual Consumption
HCE Aspen Office	25 kW	11.13 kW	97,762 kWh
HCE Aspen Office Residential Suite A	7 kW	0.74 kW	6,499 kWh
HCE Aspen Office Residential Suite B	6 kW	0.95 kW	8,304 kWh

7.1.2 Natural Gas

Based on the utility gas bill data provided by the Client, Kimley-Horn found the following:

The meter serving the building at this site saw an annual gas consumption of 3,262 Therms.

This information is also provided in Table 7.1.2 for reference.

Table 7.1.2. HCE Aspen Office Gas Usage Data

Location Description	Annual Consumption
HCE Aspen Office	3,262 Therms
HCE Aspen Office Residential Suite A	Unverified
HCE Aspen Office Residential Suite B	Unverified

7.2 MECHANICAL SYSTEMS

Based on the as-built mechanical drawings, and existing data and pictures provided to our office, Kimley-Horn found the following information on the mechanical systems throughout the building. Below is a summary of these existing systems:

7.2.1 Heating, Ventilation, and Air Conditioning (HVAC)

Central Boiler System: The central boiler system consists of three 92% Efficient gas fired condensing boilers that are interlocked and operated by an older stand-alone multi-mode Heat-Timer controller. The boilers serve the Indoor fan coils, bay unit heaters, cabinet unit heaters, radiant floor heating zones, snowmelt zones and domestic hot water heating.

Heating systems for interior occupied spaces: The indoor spaces are served by electric base board radiant heaters. There are eight (8) four-foot baseboard heaters and eighteen (18) eight-foot base board heaters for a total of twenty-six (26) throughout the first and second floors. Each four-foot heater is rated at 1,000 watts and every eight-foot heater is rated at 2,000 watts.

Heating system for the vehicle storage: The vehicle storage has heating and exhaust systems only. All unit heaters serving the bays are served by six individual gas fired unit heaters.

The tables below are a listing of the existing equipment that were identified between the information shown in the as built drawings and the initial client site walk and assessment checklist information that was obtained.

Table 7.2.1. Facility Data Closet Fan Coil and Condensing Unit Data

Fan Coil	Area Served	Heating	Efficiency	Cooling	Efficiency	Controls
FC-1/CU-1	Office Building – Data Room (TBD)	N/A	N/A	24 MBH DX	Unknown	T-Stat

Table 7.2.2. HCE Office Unit Heater Data

Unit Heater	Area Served	Heating	Efficiency	HP	Controls
BB-1 (QTY. Of 26)	Various	Electric Baseboard Heater	98% Boiler	N/A	T-Stat
UH-1 (QTY. Of 6)	Vehicle Storage	75 MBH Gas Fired Reznor Heaters	83%	1/4	T-Stat

Table 7.2.3. HCE Office Domestic Hot Water Heater Data

Water Heater	Type	Heating	Watts	Controls
WH-1	Indirect Heating Hot Water Exchanger Tank	50 Gallon Electric Hot Water	4,500	Pump with Aqua Stat I

Table 7.2.4. HCE Office Pump Data

Pump	System Served	HP	Controls
CP-1	Domestic Water Heater Recirc to Boilers	1/40	Continuous

Table 7.2.5. HCE Office Exhaust Fan Data

Exhaust Fan	Area Served	HP	General Exhaust	Source Capture	Controls
EF-1	Vehicle Storage	1/3	General	N/A	Continuous

7.2.2 Summary of Potential Mechanical System Improvements for Energy Usage

The system is currently configured where is would pass current energy code requirements and can continue to operate as configured with no code conflicts. Considering the overall goal to phase out the use of fossil fuels in accordance with the State of Colorado's renewable energy standards, the existing mechanical systems will require modifications in the future as the systems operated on natural gas are phased out. With that said, there are still some improvements that could be made to the system that would decrease your overall annual gas use for the facility during the interim. A summary of the system is listed below:

Heating system for the Interior Areas: The entire building has electric base board heaters for the indoor heating that were installed in 2018.

The indoor mini-split system serving the data room will need the associated heat loads being rejected off of the equipment in order to determine whether this system used for Air Conditioning (AC) in the data room is properly sized for the equipment installed..

Heating system for the vehicle storage: The vehicle storage area is served by five individual gas fired heaters that operate from a local thermostat. The efficiency for the unit heaters is set. The overall energy use of the space cannot be changed via modifications to the system itself. The are some options to increase the overall energy use for the space but would require modifications to the current system to realize those improvements.

3.3 PLUMBING SYSTEMS

Based on the as-built Plumbing drawings, and existing data and pictures supplied to our office, Kimley-Horn found the following:

3.3.1 Domestic Water Plumbing Fixtures

Below is a summary of the plumbing fixture types, quantities, and baseline on the water usage for each fixture based on the record drawings. Additionally, shown are the recommended flowrates for typical low flow plumbing fixtures.

Table 3.3.1. HCE Office Plumbing Fixture Data

Plumbing Fixtures	Quantity	Existing Flowrate	Code Required Flowrate
Laboratory with Faucet	6	1.2 GPM	0.5 GPM
Water Closet with Flush Tank	7	1.6 GPF	1.6 GPF*
Urinal with Flush Valve	1	1.6 GPF	1.0 GPF*
Shower basin with Trim Kit (Includes Combo with Bathtubs)	5	1.5 GPM	2.5 GPM*
2-Compartment Sink	3	2.5 GPM**	2.5 GPM

Drinking Fountain	1	Standard	Standard
Janitor Sink with Faucet	1	Standard	Standard

1.* This is the IPC code requirement with regards to water conservation plumbing fixtures for this building type and application. There is additional option available for different choices in water conservation based on client needs.

2.** This flowrate was not able to be verified and is an assumed flowrate base on the age of the building and the codes in effect at that time.

3.3.2 Summary of Potential Domestic Water Conservation Improvements

The domestic water plumbing fixtures for this building are for the most part within the current code requirements other than the lavatories in the restrooms. With that said, there have been many improvements in plumbing fixtures and lower flowrates. There are many options available for reducing water usage well beyond the code requirements. These options for additional water savings can be discussed to determine whether the potential water saving warrant the capital improvement costs.

7.4 ELECTRICAL SYSTEMS

The electrical service for the HCE Aspen Office is fed by a 150 kVA HCE transformer feeding an exterior, wall-mounted 700A, 120/208V, 3-phase switchboard. The residential units are fed from the same transformer secondary and are separately metered; each service feeds a 200A, 120/208V, 3-phase disconnect fused at 175A. This switchboard feeds several branch panelboards serving the office area and two separately meter feeders centers serving load centers for the residential units.

Power Distribution	Phase	Voltage	Amperage	Output
HCE Service Transformer	3	120/208V	700A	150kVA

7.4.1 Lighting Systems

The building lighting consists of fixtures with LED sources. The interior lighting controls system consists of local manual controls with occupancy sensors. The exterior lighting controls system consists of a lighting contactor with photocell and time clock inputs, compliant with current codes.

Table 7.4.1. HCE Aspen Office Lighting Fixture Data

Fixture Type	Fixture Description (Source)	Quantity	Existing Wattage	New Conservation Wattage
B	Interior 2’x4’ Troffer (LED) - Dimming	36	Unverified	N/A
C	Interior 8.32”x4’ Troffer (LED) – non-Dimming	6	Unverified	N/A
D	Interior 8.32”x4’ Troffer (LED) – non-Dimming	7	Unverified	N/A
E	Interior Pendant (LED)	17	22	N/A
F	Interior Pendant (LED)	2	22	N/A
G	Exterior Surface Mounted (LED)	3	17	N/A
H	Exterior Ceiling Mounted (LED)	8	20	N/A

Ceiling Fan	Sylvania KT1540 (LED)	22	8.5	N/A

7.4.2 Electric Heating Systems

The HCE Aspen is equipped with approximately 20 kW of electric baseboard heating, distributed throughout both the office and residential spaces. Based on the as-built drawings provided by HCE, it is estimated that these baseboard heaters were installed in 2018 and are presumed to be in good working condition.

Table 7.4.2. HCE Aspen Office Baseboard Heater Data

Baseboard Heater	Length	Quantity	Existing Wattage	New Conservation Wattage
Marley 2500 Series 2504W	4′	8	1000	N/A
Marley 2500 Series 2508W	8′	18	2000	N/A

7.4.3 Generator Systems

A 45 kVA, 120/208V, 3-phase propane generator provides emergency backup at the site via an automatic transfer switch rated for 100A, 120/208V, 3-phase. Based on information provided by HCE, this propane generator was installed in May 2014. A typical propane generator has a life expectancy of 10,000-30,000 hours, depending on frequency of use and consistency of regular maintenance. Pending further inspection, it is anticipated that this generator may soon require major engine or generator servicing.

7.4.4 EV Charging Systems

The HCE Aspen Office is equipped with a Level 2 EV Charging Station with a rated charging capacity of 6.6 kW at 208V, 1-phase. This equipment was installed in 2019 and is presumed to be in operable and efficient working condition.

7.4.5 Summary Of Potential Electrical Conservation Improvements

Roof-top and/or parking shade structure solar PV generation could be deployed pending structural analysis and the installation of parking structures. Given the critical nature of the utility operations at this office, this site presents potentially desirable location to deploy a microgrid connection point. With sufficient solar PV improvements, the existing gasified equipment could be replaced with equivalent electrified equipment and reduce the carbon footprint of the building and operations.

8.0 CONCLUSION

In this report, Kimley-Horn has fulfilled the objectives of the first two tasks of the AABC Integrated Clean Energy Grant awarded in 2019. Consistent with the aims of the Integrated CES Feasibility Analysis, this report documents the energy usage and assessments of each of the facilities associated with the Aspen

Airport Business Center. This report has also provided limited recommendations for areas where conservation measures may reduce the carbon footprint and address the feasibility of implementing green energy improvements and microgrid technology at each facility or a combination of facilities. Recommendations will be further explored in the subsequent task in the Feasibility Analysis.

APPENDICES

Appendix 1 – Integrated CES at AABC Context Map

Appendix 2 – AABC Energy Box Energy Usage Data Detail

Appendix 3 – ASE Net Zero Solar Memo

Appendix 4 – Aspen Maintenance Facility Solar Power Report

APPENDIX 1

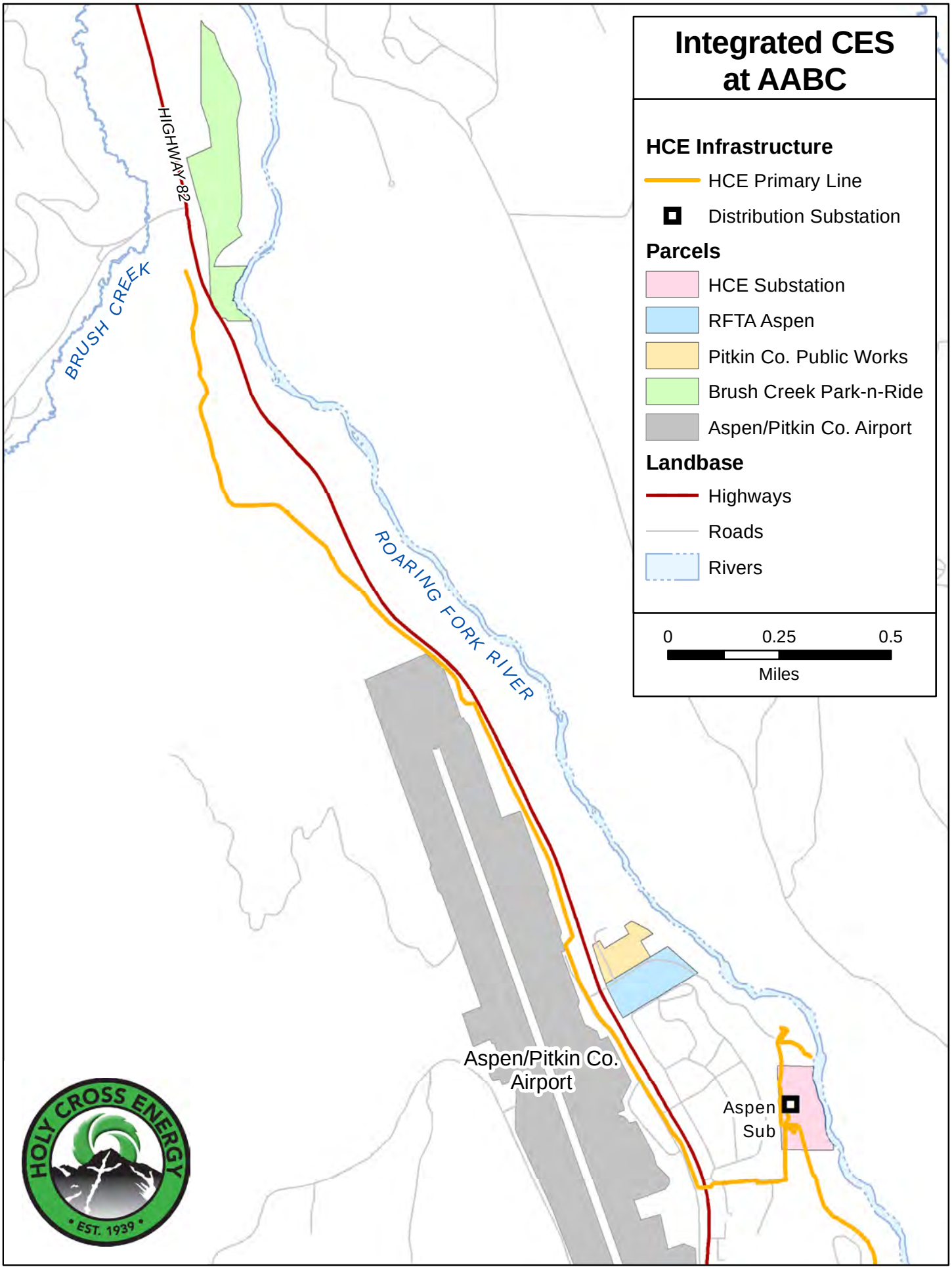
Integrated CES at AABC
HCE Infrastructure
HCE Primary Line
Distribution Substation
Parcels
HCE Substation
RFTA Aspen
Pitkin Co. Public Works
Brush Creek Park-n-Ride
Aspen/Pitkin Co. Airport
Landbase
Highways
Roads
Rivers
0
0.25
0.5
Miles
HIGHWAY 82
BRUSH CREEK
ROARING FORK RIVER
Aspen/Pitkin Co. Airport
Aspen Sub
HOLY CROSS ENERGY
EST. 1939

APPENDIX 2

AABC Energy Box Location	Annual Electricity Usage (kWh)	Annual Gas Usage (Therms)	Monthly Electricity Usage (kWh) 2019-2020												
			Nov.*	Dec.	Jan	Feb	Mar	Apr	May	Jun	Jul	Aug	Sep	Oct	Nov.*
City of Aspen Intercept Lot EV Charging Station	1,935	N/A	67	215	313	283	183	7	91	148	146	134	261	82	5
RFTA Transit (BRT) Station	35,602	N/A	2,372	7,201	8,969	5,783	2,782	1,682	644	697	571	575	1,006	1,110	2,210
Animal Shelter 1 W	2,921	Not verified	84	252	282	226	280	212	302	182	268	476	301	36	19
Animal Shelter 2 C	2,238	Not verified	63	186	214	187	194	87	203	211	182	242	187	175	107
HCE Suite A	6,499	Not verified	226	255	568	683	825	622	223	451	622	617	495	578	334
HCE Suite B	8,304	Not verified	644	1,122	1,410	1,282	975	666	153	112	66	68	133	880	793
HCE Main Office	97,762	2,981	4,360	11,337	11,470	10,974	9,489	8,021	6,790	5,860	6,639	5,841	5,567	6,752	4,662
PCPW Solar PV Generation (Forward)	299	N/A	18	38	34	25	27	28	20	9	22	23	5	31	18
PCPW Solar PV Generation (Reverse)	(53,787)	N/A	718	215	0	131	6,883	4,015	-	5,922	11,718	11,142	2,330	8,270	2,442
Airport Base Operations Center	151,689	19,796	5,337	15,726	15,049	13,553	13,883	11,787	10,224	10,703	12,383	12,990	12,024	12,016	6,014
Airport Terminal (Existing)	988,646	75,910	35,392	92,851	94,655	87,298	86,220	71,634	72,256	75,005	85,143	87,917	78,299	78,316	43,660
PCPW EV Charging Stations	18,210	N/A	703	3,256	3,346	2,532	2,856	822	352	569	869	958	1,024	623	301
Animal Shelter 3 E	47,718	Not verified	2,417	5,755	5,760	5,445	5,033	3,407	2,895	2,616	2,684	2,667	2,793	3,515	2,731
RFTA AMF	1,012,135	560	37,570	94,735	96,130	88,899	89,445	81,416	79,134	75,893	81,909	78,659	77,905	82,821	47,618
Airport Terminal Office**	35,203	N/A	3,704	3,704	3,704	3,467	3,704	2,893	2,085	1,954	2,134	2,175	2,748	3,299	3,335
RFTA Battery Electric Buses (BEB) Charging Stations	364,698	N/A	2,461	33,223	31,560	42,175	34,217	33,852	31,236	27,986	32,480	27,645	26,815	25,530	15,518
PCPW Admin/Maintenance Buildings***	144,970	17,718	11,962	13,444	16,965	17,179	15,134	15,296	12,040	9,669	9,121	9,090	8,043	7,027	-
CDOT Office	17,009	Not verified													
CDOT Sand Facility	2,516	Not verified													
CDOT Cabin Residence	8,228	Not verified													
Airport Terminal (Future)	1,129,000	-	Notes:												
Total - All Sites	2,892,793	116,965	*November 2019 and November 2020 are showing only partial data (Last half month and first half month												
Total - AABC Energy Box Sites	2,810,229	116,965	**Newly constructed building; annual usage extrapolated based worst case monthly usage												
Total - AABC Energy Box Sites (New Terminal)	2,915,380	41,055	***Data taken from November 2017 through October 2018												

	Monthly Gas Usage (Therms) 2019-2020												
	Nov.	Dec.	Jan	Feb	Mar	Apr	May	Jun	Jul	Aug	Sep	Oct	Nov
Airport Terminal	-	11,810	12,360	11,370	7,410	5,590	3,140	2,350	2,110	2,310	3,860	5,520	8,080
Airport Base Operations Center	2,659	3,885	3,508	2,656	1,475	1,091	571	522	437	604	744	1,644	-
PCPW Admin/Maintenance Buildings	2,485	4,103	3,790	2,778	1,685	789	97	83	66	160	277	1,405	-
RFTA AMF	67	145	121	91	37	55	3	-	-	1	2	38	-
RFTA Transit (BRT) Station	N/A												
HCE Main Office	421	549	599	433	328	220	85	23	16	13	41	92	161
	Note: Data has been shifted backwards to the more dominant month in the monthly gas usage cycle												

APPENDIX 3

Kimley»Horn

MEMORANDUM

To: John Kinney, Aspen/Pitkin County Airport

From: Tom Schnetzer, Kimley-Horn

CC: Bob Jones, Chris Hanna, Kimley-Horn

Date: July 8, 2020

Subject: ASE Net Zero Solar

One of the more significant goals that have been highlighted as Pitkin County and its citizens worked through the "ASE Vision" process is sustainability, which includes economic and social sustainability as well as environmental. A discrete item that has arisen from discussions of sustainability relates to energy supply and usage. As the Airport improvement program moves forward, there are a number of expectations in this regard that will be placed on the designers, including:

- Passenger terminal building to be Net Zero energy dependent (and will also be designed with sustainable features that reduce the need for energy consumption)
- General aviation area to be "electrified" so that the aircraft do not have to run their auxiliary power units
- Other buildings on the Airport campus should also strive for Net Zero energy dependency

This Technical Memorandum explores the use of solar power to meet some of these Airport goals. It is organized to explore the potential for establishing a 5-acre solar farm on Airport property east of Highway 82, integrating solar panels into new Patio Shelters that will be built for locally-owned based aircraft, and integrating solar panels for the public, employee and rental car parking areas at the Airport. The amount of energy that can be generated by these installations would be enough to power the passenger terminal, other Airport buildings, and perhaps even other users in the general area. This system could potentially be tied together using microgrid technology for efficient power distribution.

Conclusion

Our conceptual level analysis of solar installations in the three areas estimates approximately 6.436 GWh/year of annual energy production. As a reference point, a new passenger terminal building of similar size (Williston, ND) requires approximately 1.129 GWh/year of energy. The quick conclusion is that these solar installations can produce enough energy for the new terminal building to achieve Net Zero energy usage, and can also provide energy for other buildings at the Airport and in the vicinity.

Figure 1 shows the conceptual layouts for solar panels in the three areas.

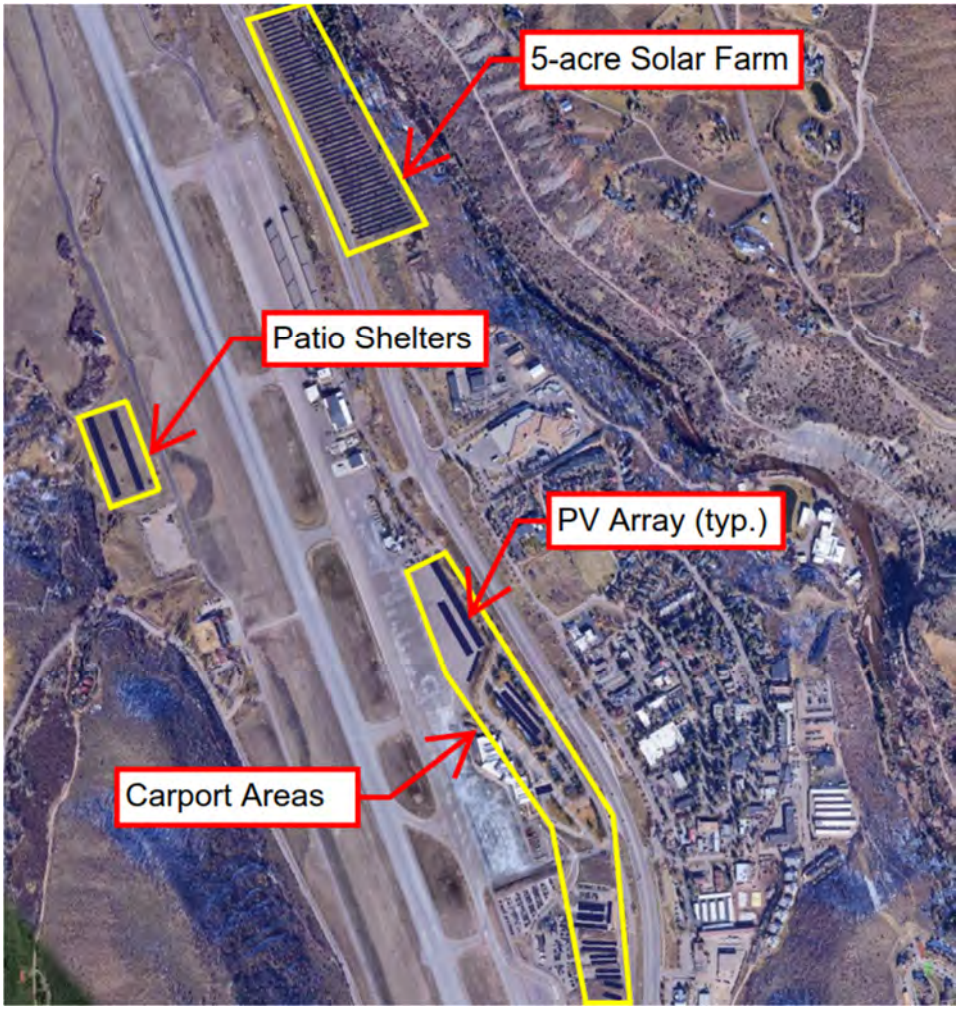

Figure 1. Subject Areas for Conceptual Array Layouts

Analytical Approach

To achieve Net Zero energy usage, the new terminal building would need to either obtain 100% of its energy needs from renewable sources such as solar or purchase offset credits for energy generated from renewable sources. Our review of solar generation opportunities in the area around the Aspen/Pitkin County Airport will use as a point of reference the annual energy usage of a new passenger terminal built (similar size as what is being proposed for Aspen) in Williston, ND. Estimates of energy production would have to be approximately equal to that energy requirement. These are high level estimates and would have to be designed for more precise performance numbers.

To develop some understanding of the renewable energy capacity that could be made available to the Airport campus, conceptual level models were developed in Helioscope (*Helioscope is a software used to model and analyze the energy production capability of a solar system*) to simulate estimated annual energy production. The production estimate is used to inform how much of the Airport campus energy requirements can be offloaded to the solar generation.

Potential solar arrangements were laid out in the areas of interest as described in the Common Ground Recommendations Airport improvement plan, including the following locations:

- 5-acre solar farm on Airport property located east of Highway 82
- Solar panels situation in the public and rental car parking lots near the terminal
- Solar panels installed on top of Patio Shelters in the general aviation area

Tier-1 supplier components were selected to determine typical performance of arrays at the campus; specifically, a Trina Solar 400 Wp PV module and Sunny Highpower PEAK 3 string inverters were selected. Electrically, the DC/AC ratio was designed to fall within the typical industry range of 1.20 to 1.30.

For module racking, a typical fixed tilt ground mount configuration was chosen for the solar farm. A fixed tilt approach was chosen because it will generally yield a smaller energy output than a tracker-based solution of the same footprint; this helps to set a low-end baseline for the production estimate. For analyzing the parking areas and patio shelters, a carport racking scheme based on RBI's CP-Tee solution was chosen. The CP-Tee carport is a fairly generic commercial grade solution from a recognized manufacturer and was selected primarily to provide a realistic racking scheme for the modeling. However, while based on a specific manufacturer, the carport analysis generally applies to similar solutions from different manufacturers.

Placement of the arrays in each model aimed to reflect realistic approaches given the spaces available. For the patio shelters, two rows were placed in a footprint similar to the existing structures on site. In the parking areas, carports were placed on existing parking where present. For the rental car area to the North of the site, two double-wide parking areas and a smaller single row was assumed as there is no existing parking present. For the solar farm, two configurations were

considered, one utilizing the entire space available and a second using about half of the available space.

Results

Using the full space allocated to the 5-acre solar farm, the Helioscope model contained (6,176) 400 W PV modules for a total DC capacity of 2.47 MWdc. This serves as an upper bound for the analysis but note that in practice the number of modules would likely be lower as additional space would be required for the supporting electrical equipment, access roads, and related considerations. The second model, using about half of the space, contained (3,002) 400 W PV modules for a total DC capacity of 1.20 MWdc.

The production analysis for the full and half sized solar farm models yielded year one annual production estimates of approximately 3.718 GWh (gigawatt-hours) and 1.855 GWh. To compare, the annual energy requirements provided for the Williston Airport passenger terminal is 1.129 GWh/year. While this is only a conceptual level model, the results of the analysis suggest that the space allocated to the solar farm can support enough renewable generation capacity to achieve Net Zero energy dependency if the energy demand for the new passenger terminal building is of a similar size to the new Williston Airport terminal.

Considering the patio shelters and the parking areas, additional capacity can be generated to support Pitkin County's other energy goals. For the space supporting the patio shelters, a conservative model based on a carport layout was developed. This model contained two identical rows of (870) 400 W PV modules for a total capacity 696 kWdc. For the parking areas, in aggregate, a total of (4,964) 400 W panels were arranged along the Eastern side of the Airport campus for a total DC capacity of 1.99 MWdc. Note that the rental car area to the north contains the largest density of panels (1,791) and is also the least certain aspect of the model due to the lack of defined parking spaces. To hedge against that uncertainty, a more conservative approach excluding the rental car area was also modeled and contained (3,173) modules for a total DC capacity of 1.27 MWdc.

The production analysis for the patio shelter model and the two parking area models (less conservative and conservative) respectively yielded year one annual production estimates of approximately 0.946 GWh, 2.735 GWh, and 1.772 GWh. Looking at the more conservative modeling, the combined production output of the patio shelters and the parking areas is 2.718 GWh/year. Depending on the demand requirements, this capacity could be used to offload the energy used by the plane auxiliary power units and cover some of the energy requirements of other buildings in the Airport campus.

For expanded assumptions and summary version of the analysis please see the below Analysis Summary section.

Kimley»Horn

Analysis Summary

Assumptions

- Patio shelters and carports to use similar mounting structure to support solar panels.
- Analysis based on the RBI CP-Tee carport solution but is applicable to similar solutions from different manufacturers.
- For the purpose of the energy production analysis:
    - For Carports:
        - Locations of carports are based on areas designated for solar and EV infrastructure per the Common Ground Recommendations.
        - Placement of panels within the designated zones follows existing parking.
        - Placement of panels in the rental car area assumed (2) double wide rows and one single row along the Southern portion of the lot.
        - Approximate carport height is 12 feet.
    - Placement of panels for the patio shelters assumes:
        - Total of (2) rows in the designated area.
        - Approximate patio shelter height is 15 feet.
- For patio shelters, new structures will be able to support the weight of the PV modules.

5-Acre Solar Farm

- **Configuration**
    - Fixed tilt, 2-in portrait
    - Tilt angle: 30 degrees
    - Row-row spacing: 20 ft
    - Assumes subject area is flat with no topographic concerns
    - Full Space Model
        - (6,176) 400 W PV modules
        - DC Nameplate: 2.47 MWdc
    - Half Space Model
        - (3,002) 400 W PV modules
        - DC Nameplate: 1.20 MWdc
- **Estimated Year One Energy Production**
    - Full Space Model: 3.718 GWh
    - Half Space Model: 1.855 GWh

Auto Parking Area

- **Configuration**
  - Carport mounting structure, fixed tilt at 7 degrees
  - Mounting height: 12 ft
  - PV modules in portrait, frame size varying from (3) to (5)
  - Conservative Model
    - (3,173) 400 W PV modules
    - DC Nameplate: 1.27 MWdc
  - Full Model
    - (4,964) 400 W PV modules
    - DC Nameplate: 1.99 MWdc
- **Estimated Year One Energy Production**
  - Conservative Model: 1.772 GWh
  - Full Model: 2.735 GWh

Patio Shelters

- **Configuration**
  - Carport mounting structure, fixed tilt at 7 degrees
  - Mounting height: 15 ft
  - (6) PV modules in portrait
  - (2) identically sized rows
  - (870) 400 W PV modules per row
  - DC Nameplate: 696 kWdc
- **Estimated Year One Energy Production**
  - 0.946 GWh/year

Kimley»Horn

Pricing Considerations

Exact pricing is beyond the scope of Kimley-Horn's expertise and a solar developer should be engaged to explore the breadth of financial options available to Pitkin County. That stated, data provided by the National Renewable Energy Lab (NREL) can be used to develop rough budgetary estimates to bring the solar projects through construction. The data references and cost analysis can be viewed below.

Cost References

- Commercial scale system cost (1 MWdc): **$1.72/Wdc**
  - Ref: page 36 of Link 1
  - Generally considered as commercial rooftop and ballasted systems from 10 kW – 2 MW.
- Utility scale system cost (5 MWdc), fixed tilt: **$1.36/Wdc**
  - Ref: page 49 of Link 1
  - Generally considered as ground mounted systems, fixed tilt and one-axis trackers greater than 2 MW.

Estimated System Cost*

- 5-Acre Solar Farm Full Space Model
  - 6176 modules / 2.47 MWdc
  - Est Cost Low: $3,359,200
  - Est Cost High: $4,248,400
- 5-Acre Solar Farm Half Space Model
  - 3002 modules / 1.20 MWdc
  - Est Cost Low: $1,632,000
  - Est Cost High: $2,064,000
- Patio Shelter Model
  - 1740 modules / 696 kWdc
  - Est Cost: $1,197,120 *(Commercial)*
- Auto Parking Area – Conservative Model
  - 3173 modules/ 1.27 MWdc
  - Est Cost: $2,184,400 *(Commercial)*

Data References

Link 1: https://www.nrel.gov/docs/fy19osti/72133.pdf
Link 2: https://www.nrel.gov/docs/fy20osti/75484.pdf (RE: Page 29)
Link 3: https://www.nrel.gov/analysis/solar-installed-system-cost.html

**Estimated costs include EPC, install/labor, module, inverter, balance of system, and related costs.*

Sample Solar Layouts

Figure 2. Sample Fixed Tilt Solar Array

Figure 3. Sample Fixed Tilt Solar Array

Figure 4. Sample Carport Layout

Figure 5. Sample Carport Layout

APPENDIX 4

ASPEN MAINTENANCE FACILITY SOLAR ARRAY FEASIBILITY ASSESSMENT

An analysis of the technical, structural, regulatory and economic considerations for constructing a solar array on the roof of the Aspen Maintenance Facility

DECEMBER 16, 2019

ROARING FORK TRANSPORTATION AUTHORITY
Katharine Rushton (CLEER) and Michael Hermes (RFTA)

Table of Contents

Introduction: 1

Project Goals and Context: 1

Design Considerations for Solar Arrays on Flat Roofs in High Snow Load Environments:..... 1

Ballast mounted solar panels *Directly attached solar panels* 2

Analysis of the Suitable Roof Area at the AMF: 2

Building Code Considerations for Solar Panel Layout: 4

Potential Panel Layouts and Economic Feasibility Assessment: 4

..... 6

Potential Energy Production Estimates:..... 6

Project Financial Considerations..... 7

Project Permitting Considerations: 8

Next Steps:..... 8

Introduction:

In response to continued interest in the solar energy production potential of the roof at the Aspen Maintenance Facility (AMF), and the desire to reduce the facility's carbon footprint, staff from RFTA partnered with Clean Energy Economy for the Region (CLEER) to analyze the potential for a roof mounted solar array at the AMF.

The following report provides a high-level analysis of the solar array design options, energy production potential, estimated cost, technical, regulatory and financial considerations, and potential next steps associated with this project.

Project Goals and Context:

The goal of the project to construct a solar array on the roof of the AMF is to maximize the solar energy production potential of the facility, reduce the facility's carbon footprint and help make the local electrical grid more resilient and less dependent on fossil fuels.

The per kilowatt hour cost of the electricity produced by this solar array will not be the overriding factor driving the decision to build this project. The cost to purchase electricity from the Holy Cross grid, or to purchase renewable electricity from their "Pure Power Program", will be less than the levelized cost of energy produced from the AMF solar array.

The power produced by this project will be net metered, meaning that it will power the facility in conjunction with grid electricity. It is estimated that the solar production can offset 40% of the overall annual energy consumption of the AMF. The solar array will also be interconnected to the Holy Cross grid, helping to make the overall local power grid less dependent on fossil fuels.

A potential future project to also interconnect the solar array to battery storage at the facility could have the potential to make the facility itself more self-reliant in the event of a power outage.

Design Considerations for Solar Arrays on Flat Roofs in High Snow Load Environments:

There are two possible mounting methods for solar PV installations on flat roofs: ballast mounted or direct attachment. In order to determine which system would provide the highest value energy production to cost ratio will require detailed engineering and design in order to evaluate the roofs ability to support a solar array and analyze the cost differences between the two mounting methods.

Ballast mount systems are a good choice for situations where penetrations in the roof should be avoided and where high wind loads can be expected. Ballast mounted systems sit low to the roof and can only be tilted at a maximum of a 10-degree angle so energy production will be negligible in winter months when the roof and panels are covered in snow much of the time. However, because these systems sit at low tilt angle, there is reduced inter row shading allowing the installation of more total panels per square foot than a direct attach

mounting system. The increase in installed kW capacity leads to higher production in the summer months and this may make up for lost production in winter. Because the ballast blocks add weight to the roof, information on the capacity of the roof to withstand additional load above snow load will need to be collected.

Direct attachment mounting systems are built on stanchions, also known as stand offs, that penetrate the roof and directly attach to the structure of the building. With this system, panels can be titled at more optimum angles for energy production, typically 30 degrees, and they can withstand higher wind load than ballast systems. Solar panels installed at this steeper tilt angle allows snow to slide off the panels, which could increase the average electrical production of the system. However, in a high snowfall areas such as Aspen the snow can accumulate up to several feet deep, requiring particularly tall, custom manufactured stanchions. The increase in energy production may not warrant this increase in cost. Furthermore, the higher tilt angle leads to less unusable space due to inter row shading and subsequently fewer total panels per square foot can be installed than with a ballasted mounted system.

Ballast mounted solar panels

Directly attached solar panels

Analysis of the Suitable Roof Area at the AMF:

The roof at the AMF covers approximately 62,212 square feet and is divide into three major sections. All three roofs are constructed with a tapered foam insulation system covered by a waterproof membrane and held in place by a layer of river rock ballast. There are six energy recovery ventilation units and 42 smoke hatches that open in the event of a fire on the roofs that limit the number of usable square feet on the roof. Additionally, there are walkways constructed from concrete pavers from the roof access to each ERV to protect the roof from damage while staff are servicing the ventilation units. Fire, building and safety code setbacks also limit the space avaible on the roof for a solar array.

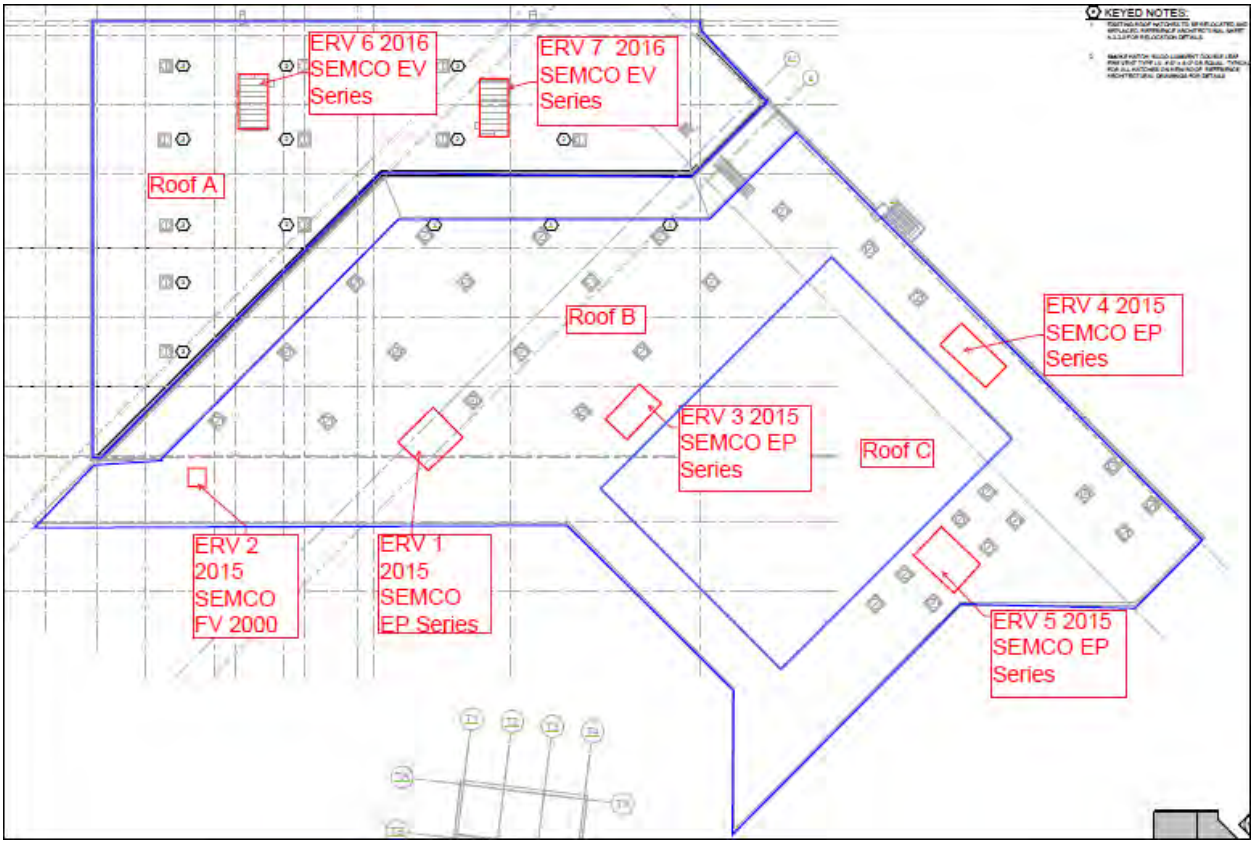

Roof "A" was constructed as part of the expansion of the facility in 2017 and to avoid making penetrations in this new roof membrane the best choice for a solar array would be a ballast-mounted system with protective matting placed beneath the ballast trays to protect the roof membrane.

Roofs B & C were replaced in 2003 with a roofing product designed to last 15 years so it is nearing the end of its useful life. These roofs should be replaced prior to the installation of the solar panels and in 2014, staff received a proposal to replace the roofs for approximately $400,000. The tapered foam insulation under the roof membrane is over 40 years old and there is some question as to whether it would support a ballasted solar panel installation without breaking down and creating low spots in the roof. The need to replace roofs B and C provide an opportunity to evaluate the feasibility of direct attachment standoffs built on stanchions for solar racking. The standoff installation work can be coordinated to occur at the same time as roof replacement so that they are incorporated into the new roof membrane and will allow the roofing company to fully guarantee the new roofs. However, an analysis of the cost of this system verses the additional energy that it may produce may indicate that a ballast mount system offers more overall value

The entire roof system will also need to be evaluated by a structural engineer to determine the suitability of each roof to support the weight and wind loads of the solar panels. The insulation system on roofs B and C will also need to be evaluated to see if it can support the weight of a ballasted system without crushing. This evaluation will help drive the decision on the use of the ballasted or the direct connect system for the solar panels and may

influence the design of the replacement roof for sections B and C between a mechanically adhered or a ballasted roof system.

Building Code Considerations for Solar Panel Layout:

The 2018 International Fire Code, section 1204.3.1 Perimeter pathways, mandates that there shall be a minimum of 6-foot wide clear perimeter around the edges of the roof unless either axis of the building is 250 feet or less in which case the perimeter pathway can be reduced to 4 feet minimum width. In the case of the AMF, a 4-foot perimeter pathway will suffice.
The 2018 International Fire Code, section 1204.3.2 Interior pathways, mandates that interior pathways shall be provided at intervals not greater than 150 feet throughout the length and width of the roof. There must be a pathway of at least 4 feet wide around roof standpipes or ventilation hatches and a pathway of not less than 4 feet wide around roof access hatches, with at least one pathway to a parapet or roof edge.

Potential Panel Layouts and Economic Feasibility Assessment:

Design Option 1

In order to conduct a high-level economic feasibility study, a preliminary layout was produced using a ballast mount design on all three roofs. The resulting system size of 300 kW was priced based on current market conditions and costs for similar sized ballast mount systems on flat roofs.

System Size	300 kW
Estimated annual energy production	393,909 kWh
Percentage of annual energy consumption	40%
Estimated construction cost	$600,000
Cost per Watt	$2.00/Watt

Example potential layout 1

Energy Production

Annual energy production data was de-rated to account for snow covering the panels for 50% of December, 100% of January,100% of February and 50% of March.

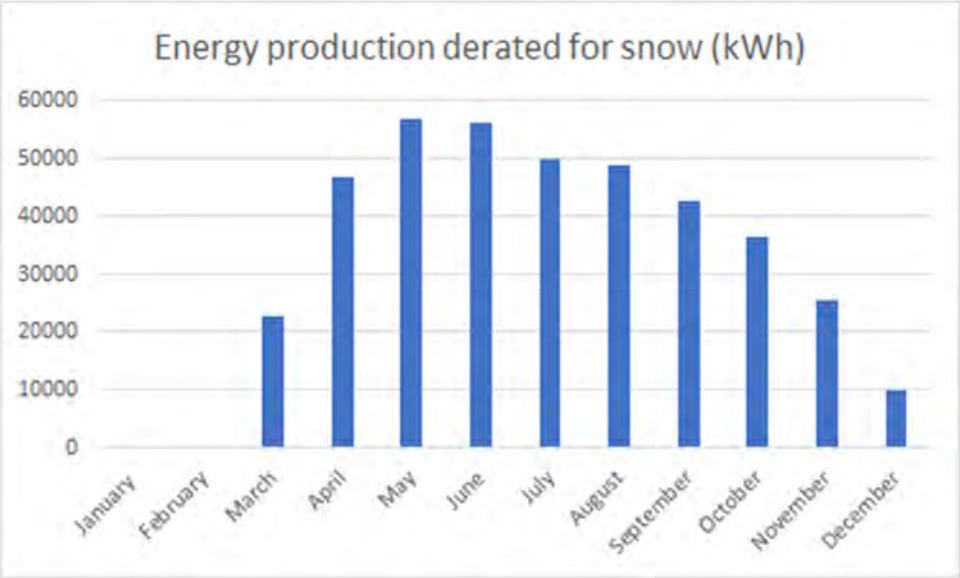

Design Option 2

A second potential layout was produced using a ballast mount design on roof A and directly attached systems, tilted at a 30-degree tilt angle, on roofs B and C.

System Size	257 kW
Estimated annual energy production	391,308 kWh
Percentage of annual energy consumption	40%
Estimated construction cost	$591,100
Cost per Watt	$2.30/Watt

Example potential layout 2

Potential Energy Production Estimates:

For the ballast mount system on roof A, annual energy production data was de-rated to account for snow covering the panels for 50% of December, 100% of January,100% of February and 50% of March. An assumption was made that the direct attach system would shed snow.

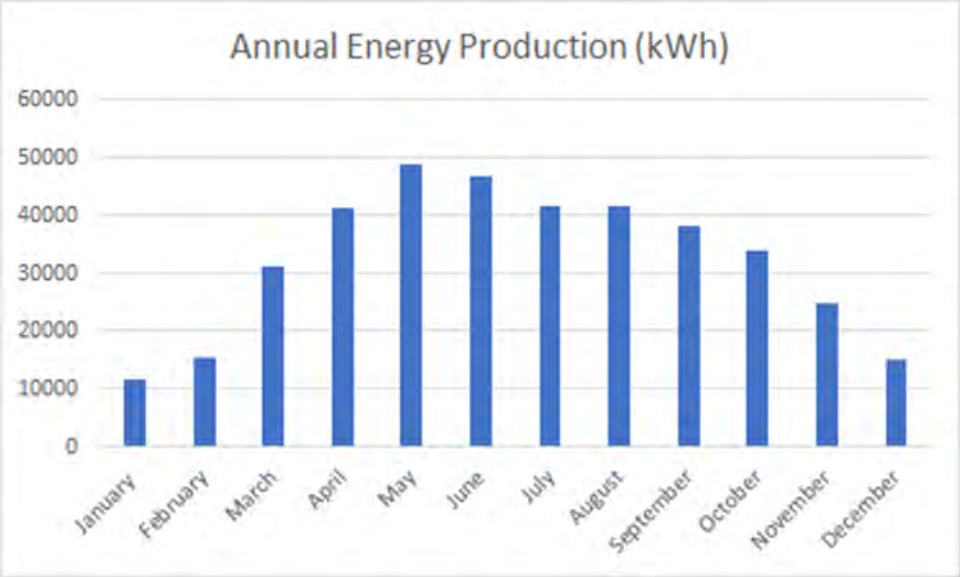

Project Financial Considerations

A 20-year cash flow analysis was completed for the 300-kW ballast mounted project, and modelled under the assumption that RFTA would be the owner and operator of the system. The upfront installed cost is estimated to be approximately $600,000.

As RFTA is a tax-exempt entity, the organization would not be able to monetize the Federal Investment Tax Credit (ITC), a considerable financial driver for solar project economics. Other tax-exempt organizations in the valley have overcome this by applying for funding from the CORE Randy Udall Energy Pioneer grant program.

Holy Cross Energy (HCE) also provide financial incentives for non-tax paying entities that invest in grid interconnected solar PV projects. Holy Cross will pay an incentive of up to 40% of the project cost capped at a maximum of 25kW. In this instance, a value of $20,000.

Three financial scenarios were modelled:

1. A net metered project with no grants or incentives
2. A net metered project with a grant of 30% of the system cost
3. A net metered project with a 30% grant and an HCE incentive

The three investment scenarios were compared based on the Internal Rate of Return (IRR) the Net Present value (NPV) of the investment after 20 years, the Payback year, the year that the investment "breaks even" compared with the cost of continuing to purchase grid electricity, and the Levelized Cost of Energy (LCOE)

	Net metered only	Net metered +30% grant	Net metered +30% grant +HCE incentive
IRR	-0.67%	2.7%	3.2%
NPV	$-19,723	$62,427	$71,554
Payback year	n/a	16.9	16.1
Break Even Year	11.5	8.4	8.1
LCOE	$0,1202/kWh	$0.0843/kWh	$0.0822/kWh

The current cost of energy at the AMF, purchased from the Holy Cross grid, is $0.0649/kWh and the cost of buying solar energy through the Holy Cross Pure Program is currently $0.0769 ($0.0649 plus a $0.012 premium). Note that the value of the Pure Program premium will decrease as the amount of renewable energy Holy Cross incorporates onto the grid increases.

Project Permitting Considerations:

The need to apply for and receive building permits from Pitkin County for this project does pose some risk. Staff expects the usual support and objections by the public to this project but these do not seem insurmountable, given the County's desire to help reduce the area's dependence on carbon-based fuels.

When RFTA replaces the roof of the old portion of the facility, it may be desirable to obtain a waiver from the requirements to use a ballasted roofing system on the facility. The elimination of the ballasted roof system and replacement with a mechanically adhered roof will eliminate some of the weight from the roof and make the solar panels easier to install without damaging the roof. Walking on a roof covered in rocks used as ballast damages the roof and shortens its useful life. It will also be desirable to replace the roof with a white roof membrane to help reduce heating and cooling costs as well as reflect light back to the solar panels, which could increase the efficiency of the system if double-sided panels are incorporated into the system.

Next Steps:

In order to begin to gather the additional information needed to move this project forward the following steps should be undertaken.

1. This project should begin with a structural analysis of roofs A, B and C to determine their ability to either support a ballasted or direct connect panel installation. An evaluation of the foam insulation system of roofs B and C should also be done to determine if the existing insulation is at the end of it useful life and if it will support a ballasted installation systems without crushing.
2. RFTA will need to engage a solar PV design firm to work with a structural engineer to determine which of the mounting systems is the most technically and structurally feasible. Based upon the outcome of this analysis, a decision will need to be made on which system is the most economical and any structural deficiencies will need to be

addressed as part of the roof replacement project. In order to make a reasonable estimate of these costs the structural analysis will need to be completed.

3. Staff should meet with Pitkin County staff and consult with the Solar PV design firm to determine what type of solar array can be permitted under the County Building code and the steps in the process regarding the permitting process.

Once this initial project analysis has been completed, staff will have the information it needs to generate a second report to the board with more refined data and a recommendation on the viability of the project.

AABC Energy Box Preliminary Design Opinion of Probable Cost Report

DOLA GRANT FUNDING REPORT

NOVEMBER 2021 | DRAFT REPORT

Prepared By:

Kimley»Horn

Contents

1.0 Executive Summary 2
1.1 Background 2
1.2 Objective 3
1.3 Project Team 3
1.4 Opinion Of Probable Construction Cost Items Description 4
2.0 Preliminary Design Assumptions 5
2.1 ASE Terminal 5
2.2 ASE Operations Center 6
2.3 Roaring Fork Transit Authority (RFTA) AMF 6
2.4 Holy Cross Energy (HCE) Aspen Office 6
2.5 Pitkin County Public Works 7
3.0 Appendices 7

1.0 EXECUTIVE SUMMARY

1.1 BACKGROUND

Pitkin County ("the County") adopted the Pitkin County Climate Action Plan that addresses conservation measures that could be adopted to reduce its carbon footprint. The County is assuming a 30-year outlook for implementation of this plan. The initial phase in the plan is to evaluate conservation measures to be implemented at each of the facilities outlined in the Energy Volume Box (listed below under Energy Box Sites).

In May 2019, Colorado State Governor Polis approved the Roadmap to 100% Renewable Energy by 2040 and Bold Climate Action. The action plan requires the full electrification of gas-fired building equipment.

In addition to the conservation aims of the Climate Action Plan, the County's other stated goal for the project is to create flexibility in the electrical system. In recent history, incidents in the area, including forest fires and snowstorms that threatened the electrical grid, have exposed weakness in the current system. The narrow valley corridor has limited the ability of HCE to provide redundancies in the system. The proposal solution is to create flexibility in the grid by augmenting the current system with microgrid technologies, including electrical vehicle (EV) bussing and the infrastructure necessary to use the bussing energy storage in emergencies to support the grid.

Airports are one of the largest generators of greenhouse gases (GHGs) and present one of the largest barriers to meeting Colorado's 2040 goal of 100% clean energy. Energy efficiency measures and renewable energy production can be leveraged to improve airport operations, but these two aspects alone are not enough to balance the electrical demands of airports or other large-scale operations. In

order to move to a clean energy system, leaders and thought innovators are looking to new and emerging technologies to balance energy systems, including both the production and storage of clean energy. The Integrated Clean Energy Systems (CES) Feasibility Analysis at the Aspen Airport Business Center (AABC) Energy Corridor looks to move these technologies, including reducing electrical use for heating and cooling through shared thermal systems from exploratory design to practical, feasible implementation.

Pitkin County and the Aspen Pitkin County Airport, working in partnership with Holy Cross Energy and Roaring Fork Transportation Authority (RFTA), will complete a feasibility analysis to create a locally sustainable and regionally resilient energy corridor throughout the Aspen Airport Business Center. The goal of the study is to evaluate emerging clean energy technologies and best practices to design an integrated clean energy system that balances production and storage across four major public facilities: (1) Aspen/Pitkin County Airport (ASE); (2) RFTA Aspen Maintenance Facility; (3) Pitkin County Public Works (PCPW); and (4) Holy Cross Energy (HCE) electric system operations from Brush Creek Park n' Ride to the Aspen Substation.

The second key element of the project extends beyond the technology and evaluates the economic feasibility of implementation, including what is the shared risk among entities to rely on one another's energy production. The full scope of the feasibility analysis will include research and design of new technologies, how to retrofit existing infrastructure and identify the legal and operational framework needed to execute such a project across diverse agencies and energy operations.

Building an integrated clean energy system across diverse public facilities presents opportunities for not only storage and balance, but it also adds another degree of freedom and resiliency to critical infrastructure.

Consistent with the aims of this feasibility analysis, plans are currently in place to build a Net Zero Emissions airport terminal at the Aspen/Pitkin County Airport to replace the existing terminal building. Plans are also in place to replace the Pitkin County Public Works buildings within the next decade pending the acquisition of sufficient means via the available funding sources, be they grants, federal, state, local, etc.

1.2 OBJECTIVE

The objective of this report is to provide the AABC Energy Box stake holders and constituent team members with an opinion of probable construction cost (OPCC) for the conservation measures and renewable energy improvements identified in the AABC Energy Box Preliminary Design Report and as requested per Task 1.2 of Change Order Number 052.2018 F-3-B.

1.3 PROJECT TEAM

The project team includes Kimley-Horn and the following client partners associated with the Aspen Airport Business Center (AABC):

1. Pitkin County Public Works (PCPW)
2. Aspen/Pitkin County Airport (ASE)
3. Holy Cross Energy (HCE)

4. Roaring Fork Transportation Authority (RFTA)

1.4 OPINION OF PROBABLE CONSTRUCTION COST ITEMS DESCRIPTION

This report provides an OPCC for the following conservation measures and renewable energy improvements as described in the change order request and as modified by the Project Team since the kickoff of the scope of this task:

1. Aspen/Pitkin County Airport - Terminal (233 E Airport Road)
    a. Electrified Pitkin County Fleet Vehicle Charging Infrastructure
    b. Hydronic Heated Airfield Apron and Land Side Curbfront and Walkways
2. Aspen/Pitkin County Airport - Operations Center (AOC) (1001 Owl Creek Road)
    a. Airfield LED Lighting Upgrade
    b. Electric Boiler Upgrade
3. RFTA Aspen Maintenance Facility (AMF) (0051 Service Center Road)
    a. Building and Site LED Lighting Upgrade
    b. Solar PV Electrical Infrastructure (roof mount)
        i. The Client previously received a cost estimate for roof-mounted solar PV. This cost has been adjusted for inflation and included in this OPCC.
    c. Electric Boiler Upgrade
        i. This upgrade assumes the system will have the (2) gas fired boilers replaced with an electric heated boiler of equivalent capacity and the hydronic piping system infrastructure and hydronic heated mechanical equipment would remain.
4. HCE Aspen Office (215 Aspen Airport Business Center)
    a. Electric IR Heaters in Vehicle Bays
        i. This upgrade assumes the individual gas fired infrared tube heaters would be replaced with electric radiant heaters of equivalent capacity.
    b. Electrical Service Improvement
        i. Preliminary analysis indicates that the existing service has sufficient spare capacity for the load delta, resulting in no cost impact for service upgrades.
5. PCPW Administration and Maintenance Buildings (76 Service Center Road)
    a. Building and Site LED Lighting Upgrade
    b. VRF HVAC Upgrade at the Maintenance Building
    c. VRF HVAC Upgrade at the Administration Building
    d. Electric IR Heaters in Vehicle Bays
        i. This upgrade assumes the individual gas fired infrared tube heaters would be replaced with electric radiant heaters of equivalent capacity.
    e. Solar PV Electrical Infrastructure (parking canopy mounted only)
    f. Electrical Service Upgrade
        i. The existing service transformer and distribution equipment is undersized for the existing load and will require upgrade and a system analysis.

A summary is provided below and full detail OPCCs for each site are provided in Appendix 1 – AABC Energy Box OPCC.

ENGINEER'S OPINION OF PROBABLE COST
ASPEN AIRPORT BUSINESS CENTER ENERGY BOX OPCC

Kimley»Horn

DATE: 11/8/2021
KIMLEY-HORN AND ASSOCAITES

SUMMARY OF CONSTRUCTION COSTS - ALL AABC ENERGY BOX SITES					
Item No.	Bid Item Description	Quantity	Unit	Unit Price	Total Amount
1	ASE TERMINAL - FLEET EV CHARGING	1	LS	$ 2,646,492.70	$ 2,646,492.70
1	ASE TERMINAL - HYDRONIC HEATING	1	LS	$ 8,915,125.00	$ 8,915,125.00
2	ASE OPS - MEP/AIRFIELD	1	LS	$ 2,220,009.00	$ 2,220,009.00
3	RFTA AMF - DEMOLITION	1	LS	$ 8,050.00	$ 8,050.00
4	RFTA AMF - MEP	1	LS	$ 4,361,875.00	$ 4,361,875.00
5	RFTA AMF - BEB CHARGING DISTRIBUTION	1	LS	$ 270,825.00	$ 270,825.00
6	HCE ASPEN OFFICE - MEP	1	LS	$ 48,760.00	$ 48,760.00
7	PCPW - DEMOLITION	1	LS	$ 2,875.00	$ 2,875.00
8	PCPW - MEPS	1	LS	$ 2,816,580.00	$ 2,816,580.00
				TOTAL	$ 21,290,591.70

2.0 PRELIMINARY DESIGN ASSUMPTIONS

The following documents the preliminary design assumptions made in process of developing the OPCCs for the conservation measures and renewable energy improvements list above.

For each site, Kimley-Horn has provided a conceptual design for the electrical system improvements. These are provided for reference in Appendix 2 - AABC Energy Box Single-Line Diagrams.

2.1 ASE TERMINAL

Estimates for the ASE Terminal EV Fleet uses as a basis of design the 150-kW ABB HVC 150C with 2 dispensers per power unit. This is a similar topology as the RFTA BEB Charging, but with close to twice as many chargers. It is noted here that this equipment is required to be metered separately from other loads to capitalize on favorable TOU rate schedules for EV charging. For service sizing, Kimley-Horn assumes (16) ground service equipment fleet vehicles. The fleet vehicle distribution presents a possible location to integrate 1000 kW of BESS for behind the meter installation. During the preliminary design process, ASE has not finalized their decision regarding the installation of BESS for airside installation. ASE has also requested that Kimley-Horn include emergency generator backup for costing purposes.

For the hydronic heating for the airfield apron, Kimley-Horn has assumed 136 BTU/sf for an area of 278,596 square feet (approximately 6.8 acres) resulting in a total demand of an 11.1-MW system. For comparison, HCE was able to confirm that the City of Vail installed an electric replacement for hydronic heating of approximately 7 acres of sidewalk and streets with a total system load of about 12 MW. This is consistent with the heat load per square-foot assumed.
ASE has previous received an OPCC for airfield apron replacement in the area in question. It is Kimley-Horn's opinion that the integration of hydronic heating in the apron section will not have a significant cost impact beyond the hydronic piping. Therefore, this item will only account for the MEP systems involved.

2.2 ASE OPERATIONS CENTER

The airfield lighting upgrade line items have been noted explicitly in the OPCC for the AOC. This improvement assumes that two of the three existing regulators can be reused after the LED lighting replacement, and that one of the regulators will need to be replaced to accommodate the lower lighting load to maintain consistent lumens output on the airfield.

Kimley-Horn assumes that the existing PAPIs, which are owned by the FAA, will not be replaced as a part of this costing; therefore, the cost for replacement and PAPI flight check are excluded from the cost estimate.

The current costing accounts for the replacement in place of (3) gas boilers to (3) electric serving the existing hydronic heating system in the Operations Center. These quantities have been maintained due to the separate loops and redundancy originally built into the system. Accordingly, this costing assumes that the existing hydronic piping system infrastructure and hydronic heated mechanical equipment shall remain.

Preliminary analysis indicates that the existing electrical service has sufficient spare capacity for the increased load due to the replacement of the existing gas-boiler to electric and will require no upgrades.

2.3 ROARING FORK TRANSIT AUTHORITY (RFTA) AMF

Newer portions of the existing building employ LED lighting and did not require replacement. For the older portions, line items for the replacement of the lighting and controls have been included, as well as a line item for replacement site lighting poles.

Due to the extent, a separate breakdown for the demolition of the existing equipment has been provided. Based on discussions with the Client, it is necessary to maintain power to the electrical boilers in an emergency, necessitating replacement of the existing electrical infrastructure upstream the electric boilers point of connection.

Constraints on the proposed electrical infrastructure taken in concert with the roof-mounted solar limit the available capacity that can be devoted for BESS to 900kW per NEC 705.12(B). The existing BEB Charging distribution has sufficient capacity to incorporate an additional 250kW BESS. Further due diligence will be required to identify locations for the proposed equipment.

RFTA previously had a solar PV feasibility study performed for roof-mounted installation. The costing from the report is included in this OPCC with adjustments for inflation.

Of the existing boilers, the waste oil boiler replacement has been excluded from this OPCC as the waste oil boiler is already serves to repurposes the facility’s waste oil that would otherwise require recycling.

2.4 HOLY CROSS ENERGY (HCE) ASPEN OFFICE

The OPCC assumes replacement of the existing gas unit heaters with electrical infrared (IR) heaters based the vehicle bay square-footage and a demand of 30 BTU/sf.

Preliminary analysis indicates that the existing electrical service has sufficient spare capacity for the increased load due to the replacement of the existing gas unit heaters to electric and will require no upgrades.

2.5 PITKIN COUNTY PUBLIC WORKS

The existing Maintenance Building HVAC system includes (2) gas unit heaters, several gas IR tubes heaters of various sizes, and a 665,000 BTU duct heater which acts as a make-up unit and is interlocked with the vehicle bay smoke exhaust system. The costing for the replacement of this system assumes a building footprint of approximately 11,000 square feet.

The existing Administration Building HVAC system includes gas unit heaters in the vehicles bays and a furnace with A/C unit for the office spaces. The costing for the replacement of these systems assumes a 5,800 square-foot vehicle bay and 3,300 square-foot office space.

The electric IR heaters for the vehicle bays in both buildings were sizing assuming a heat load of 30 BTU/sf and a 125% design factor.

The parking canopy structure is estimated to have capacity to support a 110-kW solar PV system. Additional information on the design assumptions for the solar PV array can be found in Appendix 3 – AABC Pitkin County Public Works Solar Memorandum.

The location of the Pitkin County Public Works campus and its proximity to HCE's underground primary infrastructure presents a favorable location to integrate 500 kW of BESS for behind the meter installation. Further due diligence will be required to identify an optimal location for the proposed equipment.

The costing assumes that due to this and the additional electrical loads at the site, the existing electrical distribution will require upgrades to the existing main switchboards and installation of new equipment. Please refer to the Appendix 2 - AABC Energy Box Single-Line Diagrams for more details.

3.0 APPENDICES

Appendix 1 – AABC Energy Box OPCC

Appendix 2 – AABC Energy Box Electrical Single-Line Diagrams

Appendix 3 – AABC Pitkin County Public Works Solar Memorandum

APPENDIX 1 – AABC Energy Box OPCC

ENGINEER'S OPINION OF PROBABLE COST
ASPEN AIRPORT BUSINESS CENTER ENERGY BOX OPCC

DATE: 11/8/2021
KIMLEY-HORN AND ASSOCAITES

SUMMARY OF CONSTRUCTION COSTS - ALL AABC ENERGY BOX SITES					
Item No.	***Bid Item Description***	***Quantity***	***Unit***	***Unit Price***	***Total Amount***
1	ASE TERMINAL - FLEET EV CHARGING	1	LS	$ 2,646,492.70	$ 2,646,492.70
1	ASE TERMINAL - HYDRONIC HEATING	1	LS	$ 8,915,125.00	$ 8,915,125.00
2	ASE OPS - MEP/AIRFIELD	1	LS	$ 2,220,009.00	$ 2,220,009.00
3	RFTA AMF - DEMOLITION	1	LS	$ 8,050.00	$ 8,050.00
4	RFTA AMF - MEP	1	LS	$ 4,361,875.00	$ 4,361,875.00
5	RFTA AMF - BEB CHARGING DISTRIBUTION	1	LS	$ 270,825.00	$ 270,825.00
6	HCE ASPEN OFFICE - MEP	1	LS	$ 48,760.00	$ 48,760.00
7	PCPW - DEMOLITION	1	LS	$ 2,875.00	$ 2,875.00
8	PCPW - MEPS	1	LS	$ 2,816,580.00	$ 2,816,580.00
				TOTAL	$ 21,290,591.70

ENGINEER'S OPINION OF PROBABLE COST
ASPEN/PITKIN COUNTY AIRPORT TERMINAL OPCC

DATE: 11/8/2021
KIMLEY-HORN AND ASSOCAITES

SUMMARY OF CONSTRUCTION COSTS - ASE FLEET EV CHARGING

Item No.	*Bid Item Description*	*Quantity*	*Unit*	*Unit Price*	*Total Amount*
1	2500kVA HCE TRANSFORMER	1	EA	$ 15,000.00	$ 15,000.00
2	4000A SWITCHBOARD	1	EA	$ 150,000.00	$ 150,000.00
3	2500kW NATURAL GAS GENERATOR	1	EA	$ 890,000.00	$ 890,000.00
4	1000kW BESS	1	EA	$ 900,000.00	$ 900,000.00
5	3000A ATS	1	EA	$ 175,000.00	$ 175,000.00
6	150kVA POWER UNIT	8	EA	$ 6,504.00	$ 52,032.00
7	DISPENSER WANDS	16	EA	$ 251.00	$ 4,016.00
8	3000A FEEDER (8) 4" C. W/ (4) 500 MCM VIA TRENCH	50	LF	$ 1,250.00	$ 62,500.00
9	1200A FEEDER (4) 3" C. W/ (4) 350 MCM VIA TRENCH	50	LF	$ 375.00	$ 18,750.00
10	300A FEEDER (1) 4" C. W/ (4) 350 MCM VIA TRENCH	400	LF	$ 85.00	$ 34,000.00
11	CONTINGENCY (15%)	1	EA	$ 345,194.70	$ 345,194.70
				TOTAL	$ 2,646,492.70

SUMMARY OF CONSTRUCTION COSTS - ASE HYDRONIC HEATING

Item No.	*Bid Item Description*	*Quantity*	*Unit*	*Unit Price*	*Total Amount*
1	2500kVA HCE TRANSFORMER	5	EA	$ 15,000.00	$ 75,000.00
2	4000A SWITCHBOARD	5	EA	$ 150,000.00	$ 750,000.00
3	4000A FEEDER (11) 4" C. W/ (4) 500 MCM VIA TRENCH	500	LF	$ 1,700.00	$ 850,000.00
4	4000A DISCONNECT	5	EA	$ 5,000.00	$ 25,000.00
5	8,189 MBH ELECTRIC BOILER, CLEAVER-BROOKS WB-425	5	EA	$ 412,500.00	$ 2,062,500.00
6	HYDRONIC PIPING	3500	LF	$ 100.00	$ 350,000.00
7	BOILER EQUIPMENT (EXPANSION TANK, AIR/DIRT, ...)	1	LS	$ 100,000.00	$ 100,000.00
8	HYDRONIC HEATER MANIFOLDS	85	EA	$ 1,000.00	$ 85,000.00
9	HYDRONIC PEX TUBING	280000	SF	$ 11.50	$ 3,220,000.00
10	DDC CONTROLS	1	LS	$ 100,000.00	$ 100,000.00
11	PUMPS	7	EA	$ 10,000.00	$ 70,000.00
12	SYSTEM TEST AND BALANCE	1	LS	$ 100,000.00	$ 100,000.00
13	CONTINGENCY (15%)	1	EA	$ 1,127,625.00	$ 1,127,625.00
				TOTAL	$ 8,915,125.00

ENGINEER'S OPINION OF PROBABLE COST
ASPEN/PITKIN COUNTY AIRPORT OPERATIONS CENTER OPCC

DATE: 11/8/2021
KIMLEY-HORN AND ASSOCAITES

SUMMARY OF CONSTRUCTION COSTS - MEP/AIRFIELD

Item No.	*Bid Item Description*	*Quantity*	*Unit*	*Unit Price*	*Total Amount*
1	600A SWITCHBOARD	1	EA	$ 35,000.00	$ 35,000.00
2	4000A DISCONNECT	3	EA	$ 5,000.00	$ 15,000.00
3	250kW BESS	1	EA	$ 225,000.00	$ 225,000.00
4	400A BREAKER	1	EA	$ 1,500.00	$ 1,500.00
5	600A FEEDER (2) 3" C. W/ (4) 350 MCM	30	LF	$ 180.00	$ 5,400.00
6	400A FEEDER (2) 3" C. W/ (4) #3/0	100	LF	$ 120.00	$ 12,000.00
7	200A FEEDER (1) 2" C. W/ (4) #3/0	100	LF	$ 60.00	$ 6,000.00
8	MOBILIZATION\DEMOBILIZATION (5% MAX OF BASE BID)	1	LS	$ 58,960.00	$ 58,960.00
9	AIRFIELD SURVEY	1	LS	$ 10,000.00	$ 10,000.00
10	AIRFIELD CONSTRUCTION AREA CONTROL	1	LS	$ 7,500.00	$ 7,500.00
11	SAFETY PLAN COMPLIANCE DOCUMENT	1	LS	$ 5,000.00	$ 5,000.00
12	AIRFIELD ELECTRICAL DEMOLITION	1	LS	$ 40,000.00	$ 40,000.00
13	L-824, TYPE C, 1/C #8, 5 KV CABLE	52000	LF	$ 3.25	$ 169,000.00
14	BARE, 1/C #6, COUNTERPOISE WIRE	2000	LF	$ 3.00	$ 6,000.00
15	15-KW REGULATOR, INSTALLED	2	EA	$ 22,500.00	$ 45,000.00
16	SINGLE-WAY 2" CONDUIT, DIRECT BURIED	1000	LF	$ 28.00	$ 28,000.00
17	SINGLE-WAY 2" HDPE CONDUIT, DIRECTIONAL BORED	1000	LF	$ 50.00	$ 50,000.00
18	L-852D(L) LED IN-PAVEMENT RW EDGE/END/THRESHOLD LIGHT W/ ISO XF, ARCTIC KIT ON (E) BASE	17	EA	$ 1,500.00	$ 25,500.00
19	L-861(L) LED RW EDGE LIGHT W/ ISO XF, ARCTIC KIT ON (E) BASE	75	EA	$ 1,200.00	$ 90,000.00
20	L-861E(L) LED RW END LIGHT W/ ISO XF, ARCTIC KIT ON (E) BASE	16	EA	$ 1,200.00	$ 19,200.00
21	L-861T(L) LED TW EDGE LIGHT W/ ISO XF, ARCTIC KIT ON (E) BASE	260	EA	$ 1,000.00	$ 260,000.00
22	SIZE "B" L-867 BASE CAN IN NON-PAVED SHOULDER	10	EA	$ 1,600.00	$ 16,000.00
23	SIZE "B" L-868 BASE CAN IN NON-PAVED SHOULDER	4	EA	$ 2,000.00	$ 8,000.00
24	L-807 LED SUPPLEMENTAL WINDCONE	4	EA	$ 20,000.00	$ 80,000.00
25	SIZE 1 LED AIRFIELD GUIDANCE OR MANDATORY SIGN - 3 MODULE ON (E) BASE	66	EA	$ 5,000.00	$ 330,000.00
26	SIZE 5 LED RW DISTANCE REMAINING SIGN - ON (E) BASE	7	EA	$ 4,000.00	$ 28,000.00
27	L-804 LED RW GUARD LIGHT	18	EA	$ 2,200.00	$ 39,600.00
28	430 MBH ELECTRIC BOILER, CLEAVER BROOKS WB-121	3	EA	$ 80,000.00	$ 240,000.00
29	DDC CONTROLS	1	LS	$ 45,000.00	$ 45,000.00
30	PUMPS	3	EA	$ 12,000.00	$ 36,000.00
31	SYSTEM TEST AND BALANCE	1	LS	$ 5,000.00	$ 5,000.00
32	CONTINGENCY (15%)	1	EA	$ 278,349.00	$ 278,349.00
				TOTAL	$ 2,220,009.00

ENGINEER'S OPINION OF PROBABLE COST
RFTA AMF OPCC

DATE: 11/8/2021
KIMLEY-HORN AND ASSOCAITES

SUMMARY OF CONSTRUCTION COSTS - MAIN DISTRIBUTION DEMOLITION

Item No.	*Bid Item Description*	*Quantity*	*Unit*	*Unit Price*	*Total Amount*
1	DEMO 1200A SWITCHBOARD 'MSP'	1	EA	$ 1,000.00	$ 1,000.00
2	DEMO 600A ATS	1	EA	$ 1,000.00	$ 1,000.00
3	DEMO PANELBOARD 'DP-1'	1	EA	$ 1,000.00	$ 1,000.00
4	SALVAGE 400kW DIESEL GENERATOR	1	EA	$ 1,000.00	$ 1,000.00
5	DEMO FEEDERS	1	EA	$ 3,000.00	$ 3,000.00
6	CONTINGENCY (15%)	1	EA	$ 1,050.00	$ 1,050.00
				TOTAL	$ 8,050.00

SUMMARY OF CONSTRUCTION COSTS - MEP

Item No.	*Bid Item Description*	*Quantity*	*Unit*	*Unit Price*	*Total Amount*
1	2000KVA HCE TRANSFORMER (LABOR & MATERIALS)	1	EA	$ 15,000.00	$ 15,000.00
2	4000A SWITCHBOARD	1	EA	$ 150,000.00	$ 150,000.00
3	2000A SWITCHBOARD	2	EA	$ 90,000.00	$ 180,000.00
4	400A PANELBOARD	1	EA	$ 15,000.00	$ 15,000.00
5	900KW BESS	1	EA	$ 810,000.00	$ 810,000.00
6	250KW PV SOLAR ARRAY SYSTEM	1	EA	$ 312,000.00	$ 312,000.00
7	1.5MW NATURAL GAS GENERATOR	1	EA	$ 550,000.00	$ 550,000.00
8	2000A ATS	1	EA	$ 125,000.00	$ 125,000.00
9	3000A FEEDER (8) 4" C. W/ (4) 500 MCM VIA TRENCH	50	LF	$ 1,250.00	$ 62,500.00
10	2000A FEEDER (6) 3" C. W/ (4) 400 MCM	150	LF	$ 850.00	$ 127,500.00
11	1500A FEEDER (5) 3" C. W/ (4) 400 MCM	100	LF	$ 500.00	$ 50,000.00
12	900A FEEDER (3) 3" C. W/ (4) 350	100	LF	$ 270.00	$ 27,000.00
13	600A FEEDER (2) 3" C. W/ (4) 350	100	LF	$ 180.00	$ 18,000.00
14	400A FEEDER (2) 3" C. W/ (4) #3/0	50	LF	$ 120.00	$ 6,000.00
15	200A FEEDER (1) 2" C. W/ (4) 3/0	250	LF	$ 60.00	$ 15,000.00
16	100A FEEDER (1) 1-1/2" C. W/ (4) #1	250	LF	$ 30.00	$ 7,500.00
17	LED LIGHTING LOT (PER QUOTE), INSTALLED	1	LS	$ 660,000.00	$ 660,000.00
18	SITE LIGHTING POLES (PER QUOTE), INSTALLED	1	LS	$ 165,000.00	$ 165,000.00
19	WATTSTOPPER LIGHTING CONTROLS (PER QUOTE), INSTALLED	1	LS	$ 132,000.00	$ 132,000.00
20	1842 MBH ELECTRIC BOILER, CLEAVER BROOKS WB-202	2	EA	$ 157,500.00	$ 315,000.00
21	DDC CONTROLS	1	LS	$ 30,000.00	$ 30,000.00
22	PUMPS	2	EA	$ 12,000.00	$ 24,000.00
23	SYSTEM TEST AND BALANCE	1	LS	$ 4,000.00	$ 4,000.00
24	CONTINGENCY (15%)	1	EA	$ 561,375.00	$ 561,375.00
				TOTAL	$ 4,361,875.00

SUMMARY OF CONSTRUCTION COSTS - BEB CHARGING DISTRIBUTION

Item No.	*Bid Item Description*	*Quantity*	*Unit*	*Unit Price*	*Total Amount*
1	250kW BESS	1	EA	$ 225,000.00	$ 225,000.00
2	400A BREAKER	1	EA	$ 1,500.00	$ 1,500.00
3	300A FEEDER (1) 4" C. W/ (4) 350 MCM	100	LF	$ 90.00	$ 9,000.00
4	CONTINGENCY (15%)	1	EA	$ 35,325.00	$ 35,325.00
				TOTAL	$ 270,825.00

ENGINEER'S OPINION OF PROBABLE COST
HCE ASPEN OFFICE OPCC

DATE: 11/8/2021
KIMLEY-HORN AND ASSOCAITES

SUMMARY OF CONSTRUCTION COSTS - MEP

Item No.	*Bid Item Description*	*Quantity*	*Unit*	*Unit Price*	*Total Amount*
1	400A BREAKER	1	EA	$ 1,500.00	$ 1,500.00
2	400A PANELBOARD	1	EA	$ 15,000.00	$ 15,000.00
3	400A FEEDER (2) 3" C. W/ (4) #3/0	20	LF	$ 120.00	$ 2,400.00
4	30A FEEDER (1) 3/4" C. W/ (4) #10	200	LF	$ 30.00	$ 6,000.00
5	17 MBH ELECTRIC IR UNIT HEATERS, MARLEY M135	7	EA	$ 2,500.00	$ 17,500.00
6	CONTINGENCY (15%)	1	EA	$ 6,360.00	$ 6,360.00
				TOTAL	$ 48,760.00

ENGINEER'S OPINION OF PROBABLE COST
PITKIN COUNTY PUBLIC WORKS OPCC

DATE: 11/8/2021
KIMLEY-HORN AND ASSOCAITES

SUMMARY OF CONSTRUCTION COSTS - DEMOLITION

Item No.	*Bid Item Description*	*Quantity*	*Unit*	*Unit Price*	*Total Amount*
1	DEMO 1000A SWITCHBOARD 'MSB'	1	EA	$ 1,000.00	$ 1,000.00
2	DEMO 600A ATS	1	EA	$ 1,000.00	$ 1,000.00
3	DEMO FEEDERS	1	EA	$ 500.00	$ 500.00
4	CONTINGENCY (15%)	1	EA	$ 375.00	$ 375.00
				TOTAL	$ 2,875.00

SUMMARY OF CONSTRUCTION COSTS - MEPS

Item No.	*Bid Item Description*	*Quantity*	*Unit*	*Unit Price*	*Total Amount*
1	300KVA HCE TRANSFORMER	1	EA	$ 15,000.00	$ 15,000.00
2	4000A SWITCHBOARD	1	EA	$ 150,000.00	$ 150,000.00
3	500A PANELBOARD	1	EA	$ 20,000.00	$ 20,000.00
4	400A PANELBOARD	2	EA	$ 15,000.00	$ 30,000.00
5	500KW BESS	1	EA	$ 450,000.00	$ 450,000.00
6	110KW PV SOLAR ARRAY SYSTEM	1	EA	$ 662,000.00	$ 662,000.00
7	PARKING CANOPY STRUCTURE	1	EA	$ 550,000.00	$ 550,000.00
8	2000A FEEDER (6) 3" C. W/ (4) 400 MCM VIA TRENCH	500	LF	$ 850.00	$ 425,000.00
9	700A FEEDER (3) 3" C. W/ (4) 250 MCM	40	LF	$ 230.00	$ 9,200.00
10	500A FEEDER (2) 3" C. W/ (4) 250 MCM	50	LF	$ 150.00	$ 7,500.00
11	400A FEEDER (2) 3" C. W/ (4) #3/0	300	LF	$ 120.00	$ 36,000.00
12	100A FEEDER (1) 1-1/2" C. W/ (4) #1	800	LF	$ 30.00	$ 24,000.00
13	175KW VRF DUCT HEATER, INDEECO QUA	1	EA	$ 7,500.00	$ 7,500.00
14	13.5KW ELECTRIC IR UNIT HEATERS	14	EA	$ 2,500.00	$ 35,000.00
15	3.75KW VRF CONDENSING UNIT, LG ARUM048GSS5 (EMAILS REP 11/1)	2	EA	$ 8,000.00	$ 16,000.00
16	3.75KW VRF FAN COILS	2	EA	$ 6,000.00	$ 12,000.00
17	CONTINGENCY (15%)	1	EA	$ 367,380.00	$ 367,380.00
				TOTAL	$ 2,816,580.00

APPENDIX 2 – AABC Energy Box Electrical Single-Line Diagrams

ELECTRICAL SYMBOLS

ONELINE		
M	CT METER.	
	BREAKER.	
LSI	BREAKER WITH GFI PROTECTION, "LSI" INDICATES TRIP SETTINGS LONG, SHORT, & INSTANTANEOUS.	
	GROUND.	
GND	GROUND BUSBAR.	
NEUT	NEUTRAL BUSBAR.	
	TRANSFORMER PAD MOUNTED.	
	ATS.	
	PANELBOARD.	
EQUIPMENT		**MOUNTING (UON)**
$ M	MOTOR RATED SWITCH.	FVM
HOA	MOTOR RATED HAND-OFF-AUTO SWITCH.	FVM
	EMERGENCY POWER OFF SWITCH, MUSHROOM TYPE.	W, FVMH
	DISCONNECT, HEAVY DUTY, NON-FUSIBLE.	W
	DISCONNECT, HEAVY DUTY, FUSIBLE.	W, FVMH
	MAGNETIC MOTOR STARTER.	W
	COMBINATION MOTOR STARTER & DISCONNECT.	W, FVMH
	VARIABLE FREQUENCY DRIVE.	W
WALL	ELECTRICAL PANEL, SURFACE MOUNTED.	W
WALL	ELECTRICAL PANEL, FLUSH MOUNTED.	W
	TRANSFORMER.	FL
	DISTRIBUTION PANELBOARD.	W, FVMH
WALL	INVERTER.	W, FVMH
WH-1 AC1 AC 1	EQUIPMENT CALLOUT.	
WALL	AUXILIARY SYSTEM CABINET.	W, FVMH

ELECTRICAL ABBREVIATIONS

1P	ONE POLE
1PH	SINGLE PHASE
2/C	TWO-CONDUCTOR
2P	TWO POLE
3/C	THREE-CONDUCTOR
3P	THREE POLE
3PH	THREE PHASE
3W	THREE WIRE
4PDT	FOUR POLE DOUBLE THROW
4PST	FOUR POLE SINGLE THROW
4W	FOUR WIRE
A/C	AIR CONDITIONIG
AC	ALTERNATING CURRENT
ACS	ACCESS CONTROL SYSTEM
ADA	AMERICANS WITH DISABILITIES ACT
ADJ	ADJACENT
AFC	AVAILABLE FAULT CURRENT
AFF	ABOVE FINISHED FLOOR / GRADE
AIC	AMPERE INTERRUPTING CAPACITY
AL	ALUMINUM
ALCP	AREA LIGHT CONTACTOR PANEL
ALT	ALTERNATE
AMP	AMPERE
APPROX.	APPROXIMATE / APPROXIMATELY
AR	AS REQUIRED
ARCH	ARCHITECTURAL / ARCHITECT
ATS	AUTOMATIC TRANSFER SWITCH
AWG	AMERICAN WIRE GAUGE
BB	BUCK BOOST
BFB	BACK FEED BREAKER
BLDG	BUILDING
BRKR	BREAKER
BTU	BRITISH THERMAL UNIT
C	CEILING
CATV	COMMUNITY ANTENNA TELEVISION
CB	CIRCUIT BREAKER
CFBA	CUSTOM COLOR / FINISH SELECTED BY ARCHITECT
CFCI	CONTRACTOR FURNISHED CONTRACTOR INSTALLED
CFOI	CONTRACTOR FURNISHED OWNER INSTALLED
CKT	CIRCUIT
CL	CENTERLINE
CLG	CEILING
CO	CONVENIENCE OUTLET, RECEPTACLE
CU	COPPER
DA	DAMPER ACTUATOR
dB	DECIBLE, UNIT OF SOUND LEVEL
DEMO	DEMOLITION
DEPT	DEPARTMENT
DF	DRINKING FOUNTAIN
DIA	DIAMETER
DIM	DIMENSION
DISC	DISCONNECT
DN	DOWN
DPDT	DOUBLE POLE DOUBLE THROW
DWG	DRAWINGS
E	EAST
EA	EACH
EC	EMPTY CONDUIT WITH PULL WIRE
EJ	EXPANSION JOINT
ELEC	ELECTRICAL
ELEV	ELEVATOR
EM	EMERGENCY
EMB	EXTERNAL MAINTENANCE BYPASS
EMT	ELECTRICAL METALLIC CONDUIT
ENT	ELECTRICAL NONMETALLIC CONDUIT
EPO	EMERGENCY POWER OFF

ELECTRICAL ABBREVIATIONS

EQUIP	EQUIPMENT
EXIST	EXISTING
FA	FIRE ALARM
FAA	FIRE ALARM ANNUCIATOR
FACP	FIRE ALARM CONTROL PANEL
FBO	FURNISHED BY OTHERS
FLA	FULL LOAD AMPERES
FMC	FLEXIBLE METAL CONDUIT
FPEN	FUSE PER EQUIPMENT NAMEPLATE
FSD	FIRE SMOKE DAMPER
FVM	FIELD VERIFY MOUNTING
FVMH	FIELD VERIFY MOUNTING HEIGHT
FVNR	FULL VOLTAGE NON-REVERSING
FVR	FULL VOLTAGE REVERSING
G	GROUND
GALV	GALVANIZED
GEC	GROUNDING ELECTRODE CONDUCTOR
GEN	GENERATOR
GFCI	GROUND FAULT CIRCUIT INTERRUPTER
GFP	GROUND FAULT PROTECTION
GND	GROUND
HD	HEAVY DUTY
HID	HIGH INTENSITY DISCHARGE
HOA	HAND-OFF-AUTOMATIC
HP	HORSEPOWER
HPS	HIGH-PRESSURE SODIUM
HV	HIGH VOLTAGE
HVAC	HEATING, VENTILATION & AIR CONDITIONING
Hz	HERTZ, UNIT OF FREQUENCY
I/O	INPUT / OUTPUT
IG	ISOLATED GROUND
IMC	INTERMEDIATE METAL CONDUIT
IN/IS	INSULATED / ISOLATED
IR	INFRARED
KV	KILOVOLT
KVA	KILOVOLT AMPERE
KVAR	KILOVOLT AMPERE REACTIVE
KW	KILOWATT
KWH	KILOWATT HOUR
LED	LIGHT EMITTING DIODE
LFNC	LIQUID TIGHT FLEXIBLE NONMETALLIC CONDUIT
LPS	LOW-PRESSURE SODIUM
LRA	LOCKED ROTOR AMPERES
LTG	LIGHTING
LV	LOW VOLTAGE
MAX	MAXIMUM
MBJ	MAIN BONDING JUMPER
MC	METAL CLAD
MCA	MINIMUM CIRCUIT AMPERES
MCB	MAIN CIRCUIT BREAKER
MCC	MOTOR CONTROL CENTER
MECH	MECHANICAL
MFR	MANUFACTURER
MH	MAN HOLE
MIN	MINIMUM
MISC	MISCELLANEOUS
MLO	MAIN LUGS ONLY
MOCP	MAXIMUM OVER-CURRENT PROTECTION
MON	MONITOR
N	NORTH
NA	NOT APPLICABLE
NC	NORMALLY CLOSED
NEC	NATIONAL ELECTRIC CODE
NEMA	NATIONAL ELECTRIC MANUFACTURERS ASSOCIATION
NFC	NATIONAL FIRE CODE
NFPA	NATIONAL FIRE PROTECTION ASSOCIATION

ELECTRICAL ABBREVIATIONS

NIC	NOT IN CONTRACT
NL	NIGHT LIGHT
NO	NORMALLY OPEN
NO.	NUMBER
NTS	NOT TO SCALE
OAE	OR APPROVED EQUAL
OC	ON CENTER
OCP	OVER-CURRENT PROTECTION
OFCI	OWNER FURNISHED CONTRACTOR INSTALLED
OFOI	OWNER FURNISHED OWNER INSTALLED
OHD	OVERHEAD DOOR
OL	OVERLOAD
PF	POWER FACTOR
PH	PHASE
PNL	PANEL
PROJ	PROJECTOR
PVC	POLYVINYL CHLORIDE
QTY	QUANTITY
R	RELOCATED DEVICE / EQUIPMENT
RAU	REMOTE ANNUNCIATOR UNIT
RCP	REFLECTED CEILING PLAN
REF	REFRIGERATOR
REV	REVISIONS / REVISED
RMC	RIGID METAL CONDUIT
RNC	RIGID NONMETALLIC CONDUIT
RPM	REVOLUTIONS PER MINUTE
RR	REMOVE & RELOCATE
S	SOUTH
S/N	SWITCH NEUTRAL
S/S	START / STOP
SCA	SHORT CIRCUIT AMPERES
SF	SQUARE FOOT / FEET
SFBA	STANDARD FINISH / COLOR BY ARCHITECT
SPD	SURGE PROTECTION DEVICE
SPDT	SINGLE POLE DOUBLE THROW
SPEC	SPECIFICATION
SPST	SINGLE POLE SINGLE THROW
SQ	SQUARE
ST	SINGLE THROW
STRUCT	STRUCTURAL
SWBD	SWITCHBOARD
SWGR	SWITCHGEAR
TEMP	TEMPORARY
TL	TWISTLOCK
TP	TWISTED PAIR
TSP	TWISTED SHIELDED PAIR
TTB	TELEPHONE TERMINAL BOARD
TV	TELEVISION (CABLE)
TVSS	TRANSIENT VOLTAGE SURGE SUPPRESSOR
TYP	TYPICAL
UF	UNDERFLOOR / UNDERSLAB
UGND	UNDERGROUND
UNO	UNLESS NOTED OTHERWISE
UNSW	UNSWITCHED
UPS	UNINTERRUPTIBLE POWER SOURCE
V	VOLTS / VOLTAGE
VA	VOLT AMPERE
VFD	VARIABLE FREQUENCY DRIVE
W	WEST
W/	WITH
W/O	WITHOUT
WH	WATER HEATER
WP	WEATHER PROOF (NEMA 3R)
X	REMOVE / DEMOLISH
XF	TRANSFORMER
XP	EXPLOSION PROOF
Y	WYE

ELECTRICAL DRAWING SCHEDULE

SHEET NUMBER	SHEET NAME
E-001	ELECTRICAL SYMBOL LEGEND & ABBREVIATIONS
E-601	SINGLE LINE DIAGRAMS - ASE TERMINAL
E-602	SINGLE LINE DIAGRAMS - ASE OPERATIONS CENTER
E-603	SINGLE LINE DIAGRAMS - RFTA OPTION 1
E-604	SINGLE LINE DIAGRAMS - RFTA OPTION 2 DEMOLITION
E-605	SINGLE LINE DIAGRAMS - RFTA OPTION 2 PROPOSED
E-606	SINGLE LINE DIAGRAMS - HCE ASPEN OFFICE
E-607	SINGLE LINE DIAGRAMS - PCPW CAMPUS DEMOLITION
E-608	SINGLE LINE DIAGRAMS - PCPW CAMPUS PROPOSED

NO.	REVISIONS	DATE

Kimley»Horn
©2020 KIMLEY-HORN AND ASSOCIATES, INC.
5370 KIETZKE LANE, SUITE 100, RENO, NV 89511
PHONE: 775-787-7552 FAX: 602-944-7423
WWW.KIMLEY-HORN.COM

PROJECT NO.: 096557018
DRAWN BY: JPN
REVIEWED BY: JDB
DATE: 08/17/2021

ASPEN AIRPORT BUSINESS CENTER ENERGY BOX STUDY

ASPEN, COLORADO

SCHEMATIC DESIGN

ELECTRICAL SYMBOL LEGEND & ABBREVIATIONS

E-001

096557018

9/2/2021 9:39:04 AM

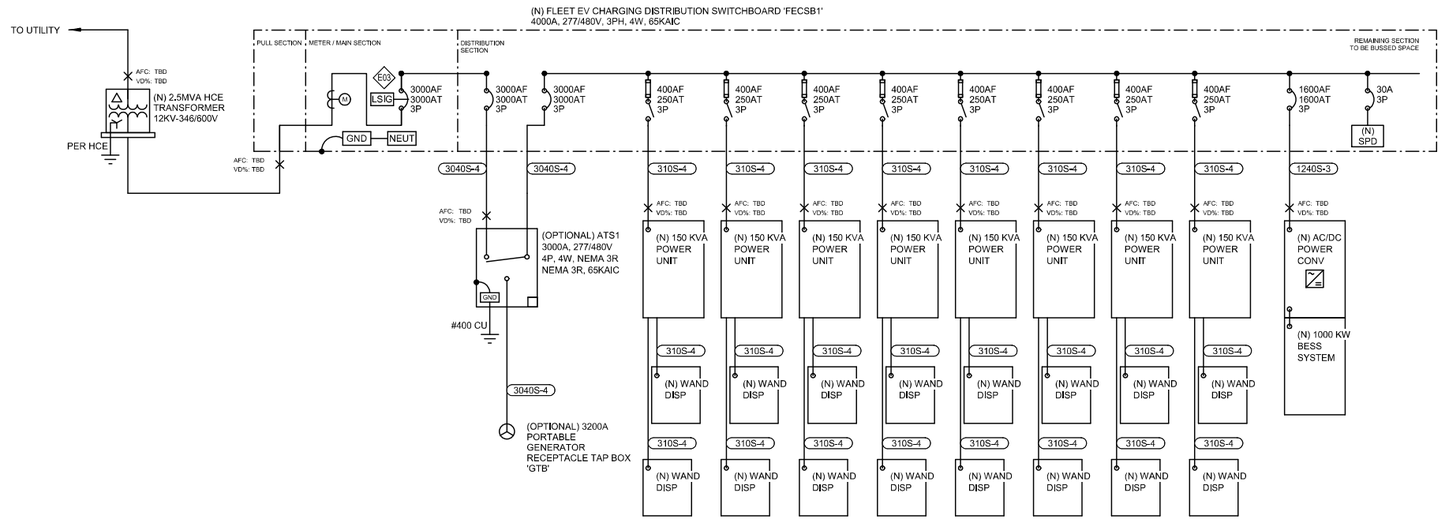

1 SINGLE LINE DIAGRAM - ASE FLEET EV CHARGING

N.T.S

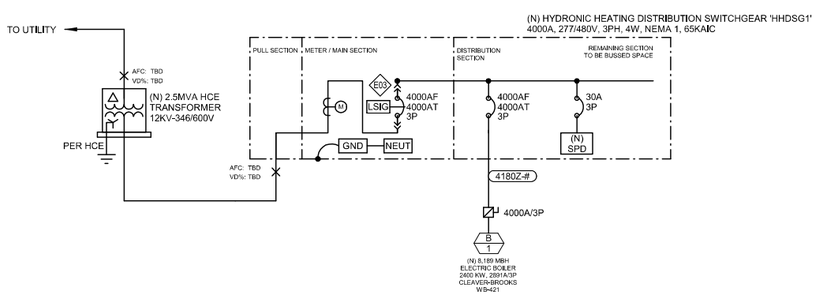

2 SINGLE LINE DIAGRAM - ASE HYDRONIC APRON HEATING (TYPICAL OF 5)

N.T.S

SHEET KEYNOTES

E03 DRAW OUT, LOW VOLTAGE BREAKER WITH REDUCED ENERGY LET THROUGH DEVICE (RELT), LOCAL STATUS INDICATION, AND GROUP FAULT PROTECTION.

WIRE AND CONDUIT SCHEDULE

SCHEDULE NUMBER (2-4 DIGIT #)
RACEWAY TYPE (NOTE 5)
ALL COPPER CONDUCTORS
XXXXZ-# GND (E.G.) 150E-4 SE
SUBSCRIPT (NOTE 4)
NUMBER OF CURRENT CARRYING CONDUCTORS (1-2 DIGIT#, NOTE 3)

WIRE AND CONDUIT SCHEDULE NOTES:

1. GROUND "GND" CONDUCTOR MAY BE DELETED ON SERVICE ENTRANCE CONDUCTORS.

2. EQUIPMENT GROUNDING CONDUCTORS SHALL BE SIZED PER TABLE 250-122 (NEC 2017) WHEN CIRCUIT BREAKERS ARE SIZED GREATER THAN AMPERE RATING SHOWN IN TABLE.

3. INDICATES THE QUANTITY OF CURRENT CARRYING CONDUCTORS (GROUND CONDUCTORS NOT INCLUDED) TO BE PULLED IN EACH RACEWAY.

4. GROUNDING SUBSCRIPTS ARE AS FOLLOWS: NO SUBSCRIPT = PROVIDE GROUND WIRE SIZE PER "GND" COLUMN. R = PROVIDE RACEWAY ONLY. CONDUCTORS FURNISHED AND INSTALLED BY OTHERS. SE = SERVICE ENTRANCE OR TRANSFORMER SECONDARY. PROVIDE GROUND WIRE SIZED PER "SE" COLUMN. IG = PROVIDE AN INSULATED GROUND CONDUCTOR PER "IG" COLUMN ALONG WITH THE GROUND OR EQUIPMENT GROUND CONDUCTOR. NG = DO NOT PROVIDE GROUNDING CONDUCTOR IN RACEWAY.

5. RACEWAY SUBSCRIPTS "Z" ARE AS FOLLOWS: P = PVC SCH-40, E = EMT, R = RIGID, AF = ALUMINUM FLEX, SF = STEELE FLEX, LT = LIQUID TIGHT FLEX, S = SEE SPECIFICATIONS FOR REQUIRED TYPE BASED ON USE AND LOCATION. *FAULT CURRENT CALCULATIONS BASED ON NON-MAGNETIC CONDUIT WORSE CASE SCENARIO.

6. ALL COPPER CONDUCTORS SHOWN ARE THWN UNLESS OTHERWISE NOTED.

TAG	TYPICAL OCP DEVICE	CONDUCTOR AMPACITY	CONDUIT SIZE	SIZE (AWG)	GND (CU)	IG (CU)	SE (CU)	NOTES
310S-4	300	310	4"	350	3	3	1/0	
1240S-3	1200	1240	(4) 3"	350	3/0	3/0	3/0	
2010Z-#	2000	2010	(6) 3"	400	250	250	3/0	
3040S-4	3000	3040	(8) 4"	500	400	400	3/0	
4180Z-#	4000	4180	(11) 4"	500	500	500	3/0	
EX	-	-	-	-	-	-	-	

NO. | REVISIONS | DATE

Kimley»Horn

©2020 KIMLEY-HORN AND ASSOCIATES, INC.
5370 KIETZKE LANE, SUITE 100, RENO, NV 89511
PHONE: 775-787-7552 FAX: 602-944-7423
WWW.KIMLEY-HORN.COM

PROJECT NO.: 096557018
DRAWN BY: JPN
REVIEWED BY: JDB
DATE: 08/17/2021

ASPEN AIRPORT BUSINESS CENTER ENERGY BOX STUDY

ASPEN, COLORADO

SCHEMATIC DESIGN

SINGLE LINE DIAGRAMS - ASE TERMINAL

E-601

096557018

9/2/2021 9:39:05 AM

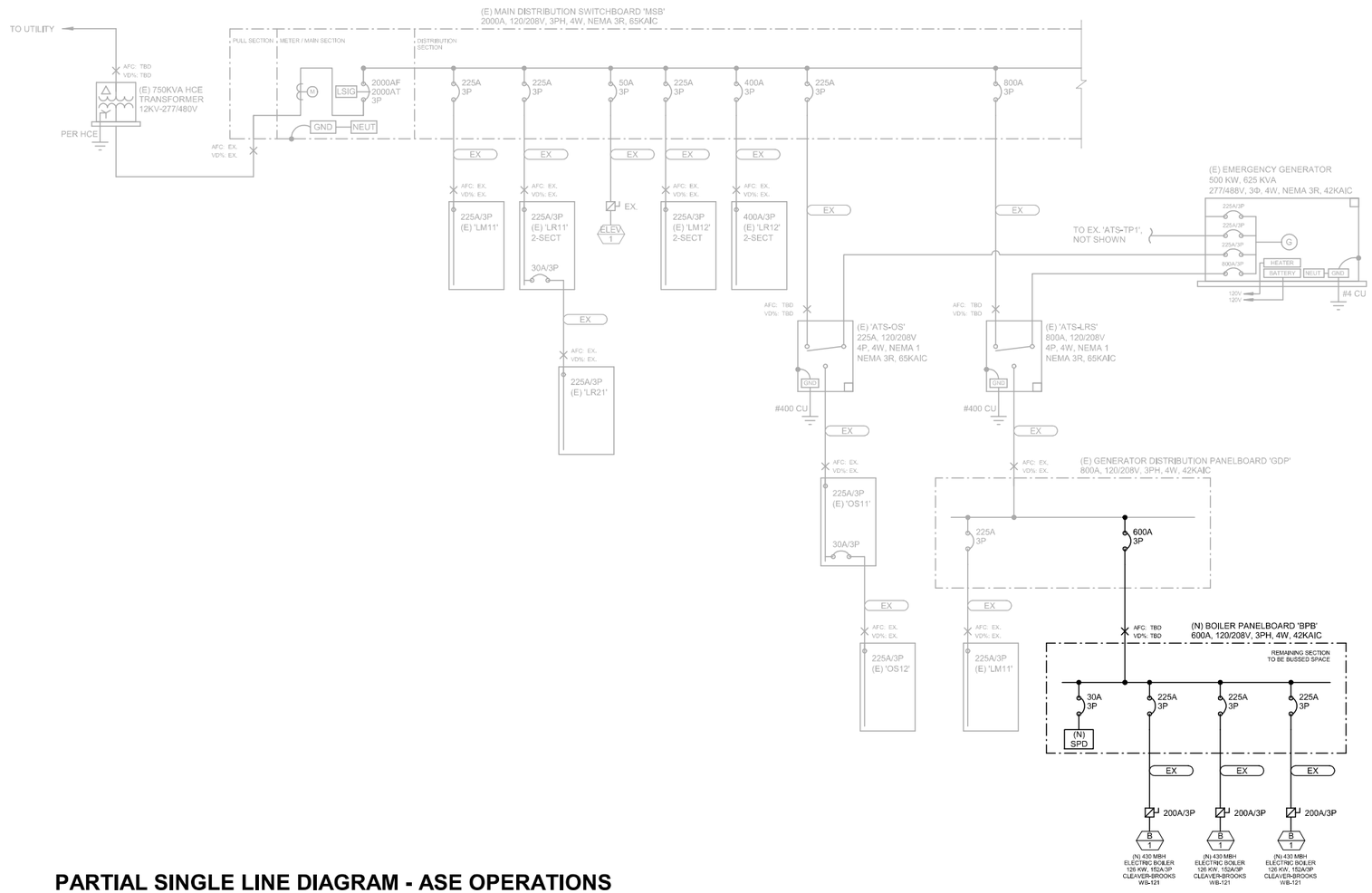

PARTIAL SINGLE LINE DIAGRAM - ASE OPERATIONS CENTER

1

N.T.S

NO.	REVISIONS	DATE

Kimley»Horn

©2020 KIMLEY-HORN AND ASSOCIATES, INC.
5370 KIETZKE LANE, SUITE 100, RENO, NV 89511
PHONE: 775-787-7552 FAX: 602-944-7423
WWW.KIMLEY-HORN.COM

PROJECT NO.: 096557018
DRAWN BY: JPN
REVIEWED BY: JDB
DATE: 08/17/2021

ASPEN AIRPORT BUSINESS CENTER ENERGY BOX STUDY

ASPEN, COLORADO

SCHEMATIC DESIGN

SINGLE LINE DIAGRAMS - ASE OPERATIONS CENTER

E-602

096557018

9/2/2021 9:39:06 AM

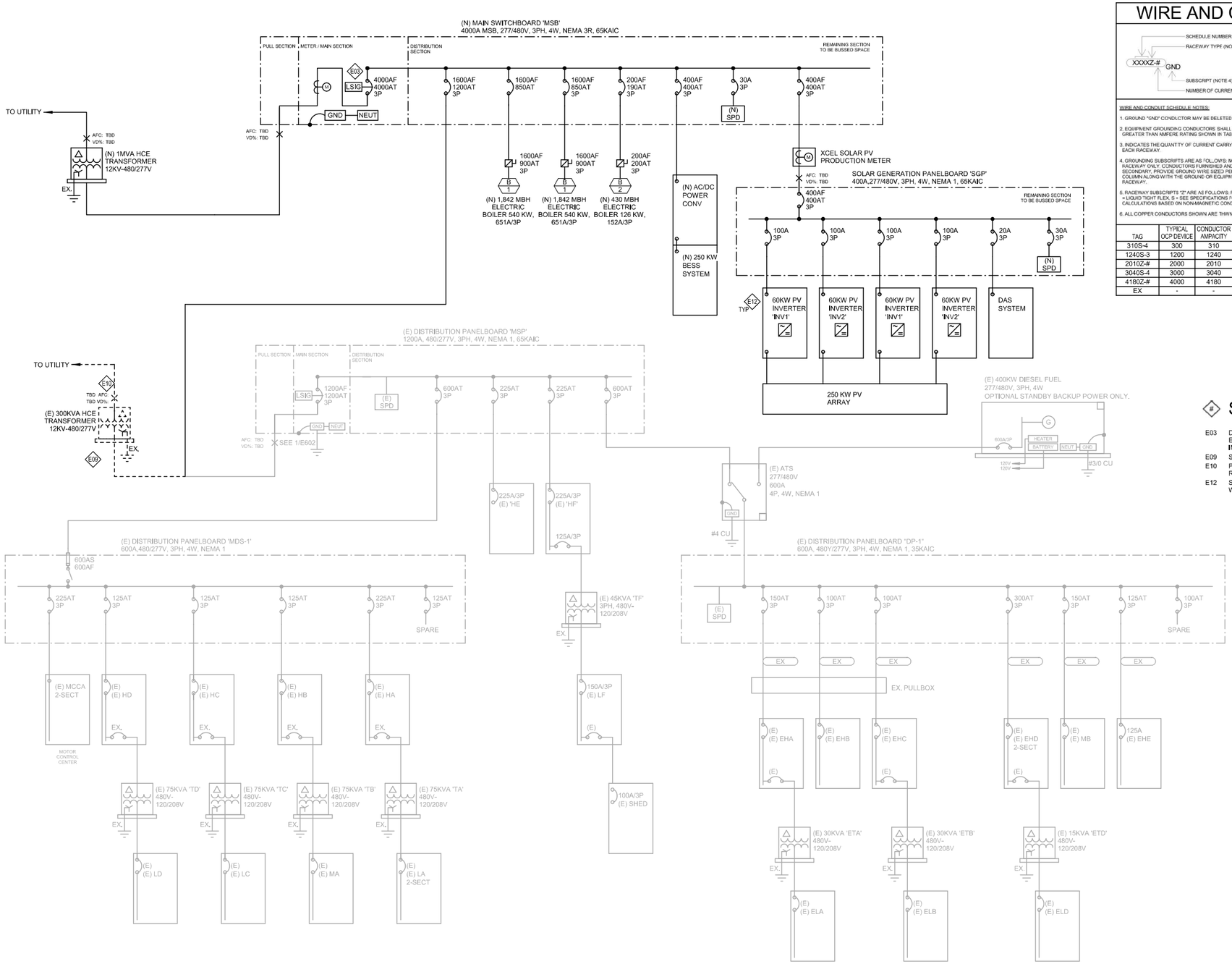

WIRE AND CONDUIT SCHEDULE

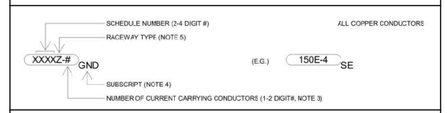

WIRE AND CONDUIT SCHEDULE NOTES:

1. GROUND "GND" CONDUCTOR MAY BE DELETED ON SERVICE ENTRANCE CONDUCTORS.
2. EQUIPMENT GROUNDING CONDUCTORS SHALL BE SIZED PER TABLE 250-122 (NEC 2017) WHEN CIRCUIT BREAKERS ARE SIZED GREATER THAN AMPERE RATING SHOWN IN TABLE.
3. INDICATES THE QUANTITY OF CURRENT CARRYING CONDUCTORS (GROUND CONDUCTORS NOT INCLUDED) TO BE PULLED IN EACH RACEWAY.
4. GROUNDING SUBSCRIPTS ARE AS FOLLOWS: NO SUBSCRIPT = PROVIDE GROUND WIRE SIZE PER "GND" COLUMN, R = PROVIDE RACEWAY ONLY, CONDUCTORS FURNISHED AND INSTALLED BY OTHERS, SE = SERVICE ENTRANCE OR TRANSFORMER SECONDARY, PROVIDE GROUND WIRE SIZED PER "SE" COLUMN, IG = PROVIDE AN INSULATED GROUND CONDUCTOR PER "IG" COLUMN ALONG WITH THE GROUND OR EQUIPMENT GROUND CONDUCTOR, NG = DO NOT PROVIDE GROUNDING CONDUCTOR IN RACEWAY.
5. RACEWAY SUBSCRIPTS "Z" ARE AS FOLLOWS: P = PVC SCH-40, E = EMT, R = RIGID, AF = ALUMINUM FLEX SF = STEELE FLEX LT = LIQUID TIGHT FLEX, S = SEE SPECIFICATIONS FOR REQUIRED TYPE BASED ON USE AND LOCATION. *FAULT CURRENT CALCULATIONS BASED ON NONMAGNETIC CONDUIT WORSE CASE SCENARIO.
6. ALL COPPER CONDUCTORS SHOWN ARE THWN UNLESS OTHERWISE NOTED.

TAG	TYPICAL OCP DEVICE	CONDUCTOR AMPACITY	CONDUIT SIZE	SIZE (AWG)	GND (CU)	IG (CU)	SE (CU)	NOTES
310S-4	300	310	4"	350	3	3	1/0	
1240S-3	1200	1240	(4) 3"	350	3/0	3/0	3/0	
2010Z-#	2000	2010	(6) 3"	400	250	250	3/0	
3040S-4	3000	3040	(8) 4"	500	400	400	3/0	
4180Z-#	4000	4180	(11) 4"	500	500	500	3/0	
EX	-	-	-	-	-	-	-	

SHEET KEYNOTES

E03 DRAW OUT, LOW VOLTAGE BREAKER WITH REDUCED ENERGY LET THROUGH DEVICE (RELT), LOCAL STATUS INDICATION, AND GROUP FAULT PROTECTION.

E09 SERVICE LATERAL BUS DUCT PER HCE REQUIREMENTS.

E10 PRIMARY CONDUIT AND CONDUCTORS PER HCE REQUIREMENTS.

E12 SOLAR PV INVERTER WITH INTEGRAL AC/DC DISCONNECT, WIRING BOX, AND RSD FUNCTIONALITY.

1 SINGLE LINE DIAGRAM - RFTA OPTION 1

N.T.S

NO.	REVISIONS	DATE

Kimley»Horn
©2020 KIMLEY-HORN AND ASSOCIATES, INC.
5370 KIETZKE LANE, SUITE 100, RENO, NV 89511
PHONE: 775-787-7552 FAX: 602-944-7423
WWW.KIMLEY-HORN.COM

PROJECT NO.: 096557018
DRAWN BY: JPN
REVIEWED BY: JDB
DATE: 08/17/2021

ASPEN AIRPORT BUSINESS CENTER ENERGY BOX STUDY

ASPEN, COLORADO

SCHEMATIC DESIGN

SINGLE LINE DIAGRAMS - RFTA OPTION 1

E-603

096557018

9/2/2021 9:39:06 AM

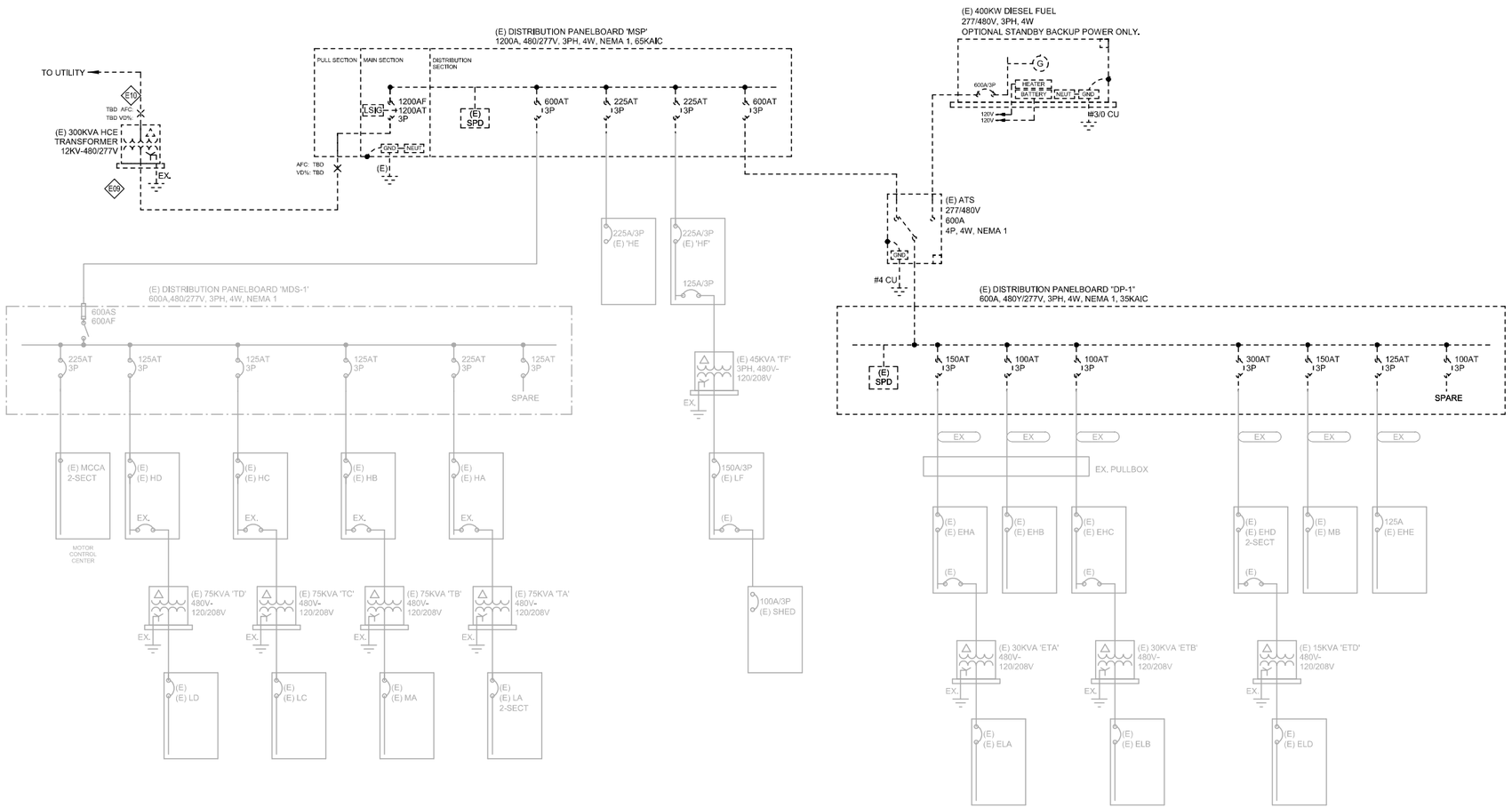

1 SINGLE LINE DIAGRAM - RFTA OPTION 2 DEMOLITION

N.T.S

9/2/2021 9:39:07 AM

NO.	REVISIONS	DATE

Kimley»Horn

©2020 KIMLEY-HORN AND ASSOCIATES, INC.
5370 KIETZKE LANE, SUITE 100, RENO, NV 89511
PHONE: 775-787-7552 FAX: 602-944-7423
WWW.KIMLEY-HORN.COM

PROJECT NO.: 096557018
DRAWN BY: JPN
REVIEWED BY: JDB
DATE: 08/17/2021

ASPEN AIRPORT BUSINESS CENTER ENERGY BOX STUDY

ASPEN, COLORADO

SCHEMATIC DESIGN

SINGLE LINE DIAGRAMS - RFTA OPTION 2 DEMOLITION

E-604

096557018

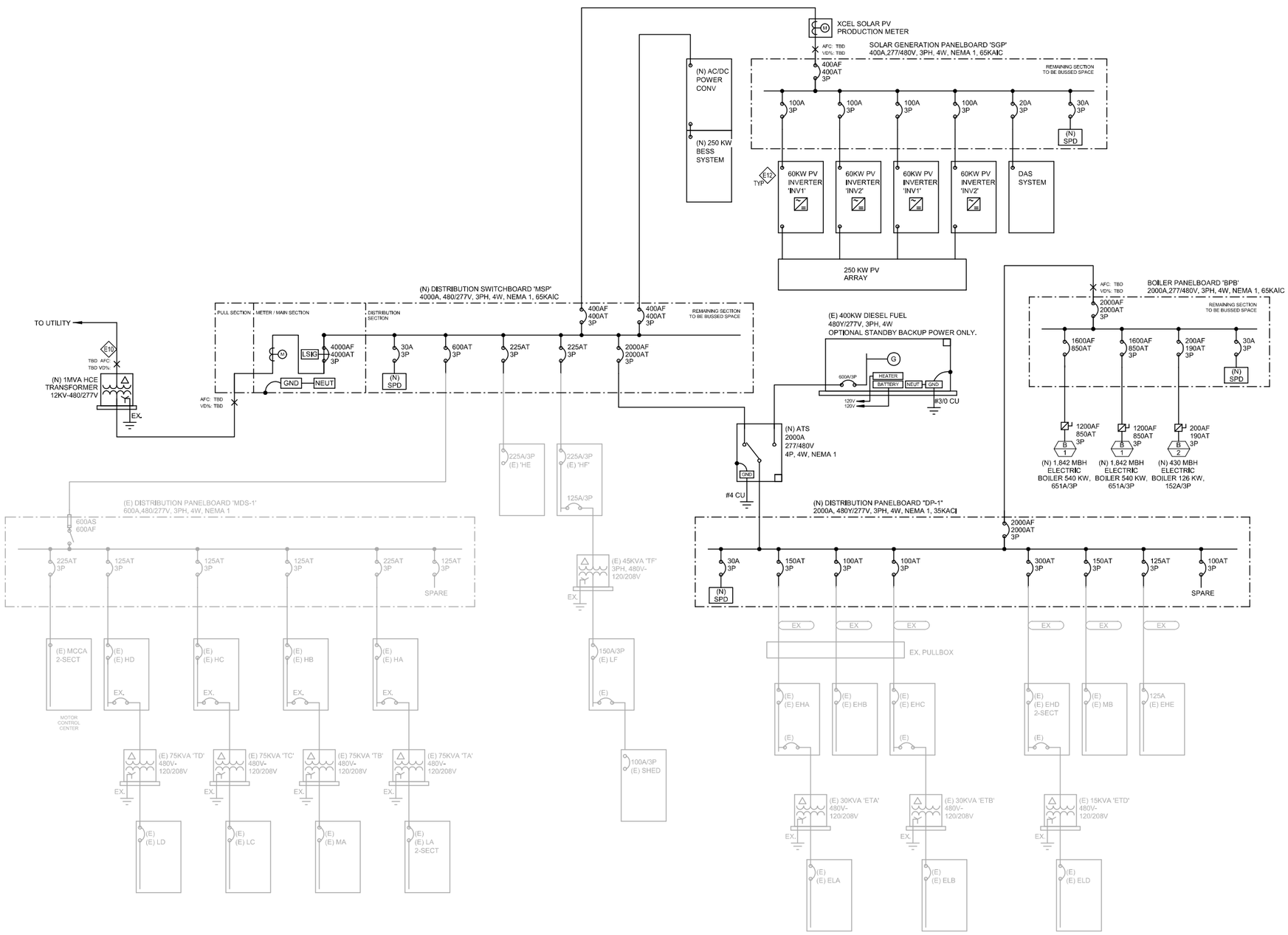

1 SINGLE LINE DIAGRAM - RFTA OPTION 2 PROPOSED

N.T.S

NO.	REVISIONS	DATE

Kimley»Horn

©2020 KIMLEY-HORN AND ASSOCIATES, INC.
5370 KIETZKE LANE, SUITE 100, RENO, NV 89511
PHONE: 775-787-7552 FAX: 602-944-7423
WWW.KIMLEY-HORN.COM

30%

NOT FOR CONSTRUCTION OR RECORDING

PROJECT NO.: 096557018
DRAWN BY: JPN
REVIEWED BY: JDB
DATE: 08/17/2021

ASPEN AIRPORT BUSINESS CENTER ENERGY BOX STUDY

ASPEN, COLORADO

SCHEMATIC DESIGN

SINGLE LINE DIAGRAMS - RFTA OPTION 2 PROPOSED

E-605

096557018

9/2/2021 9:39:07 AM

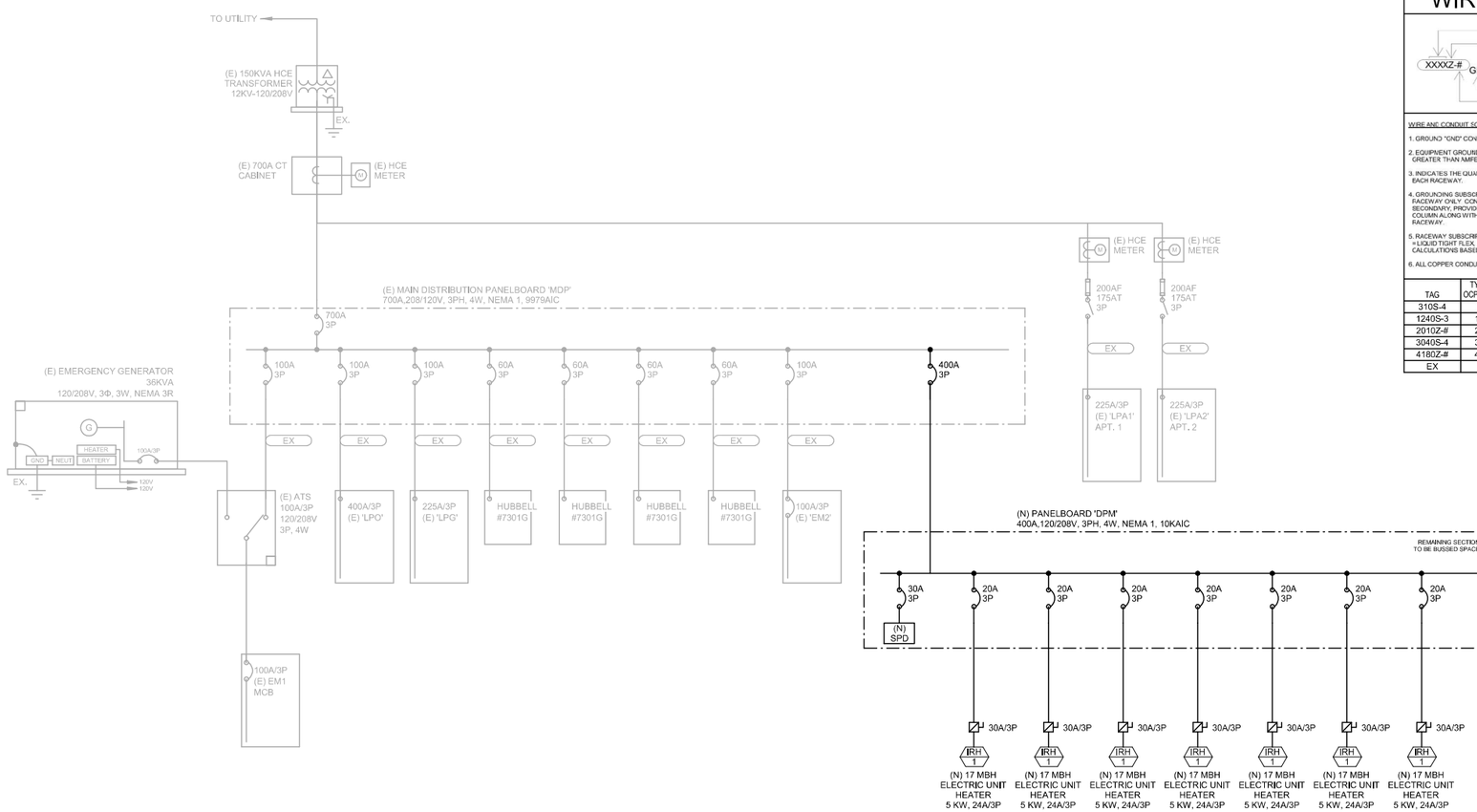

1 SINGLE LINE DIAGRAM - HCE ASPEN OFFICE

N.T.S

SHEET KEYNOTES

WIRE AND CONDUIT SCHEDULE

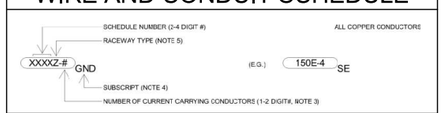

WIRE AND CONDUIT SCHEDULE NOTES:

1. GROUND "GND" CONDUCTOR MAY BE DELETED ON SERVICE ENTRANCE CONDUCTORS.

2. EQUIPMENT GROUNDING CONDUCTORS SHALL BE SIZED PER TABLE 250-122 (NEC 2017) WHEN CIRCUIT BREAKERS ARE SIZED GREATER THAN AMPERE RATING SHOWN IN TABLE.

3. INDICATES THE QUANTITY OF CURRENT CARRYING CONDUCTORS (GROUND CONDUCTORS NOT INCLUDED) TO BE PULLED IN EACH RACEWAY.

4. GROUNDING SUBSCRIPTS ARE AS FOLLOWS: NO SUBSCRIPT = PROVIDE GROUND WIRE SIZE PER "GND" COLUMN. R = PROVIDE RACEWAY ONLY. CONDUCTORS FURNISHED AND INSTALLED BY OTHERS. SE = SERVICE ENTRANCE OR TRANSFORMER SECONDARY, PROVIDE GROUND WIRE SIZED PER "SE" COLUMN. IG = PROVIDE AN INSULATED GROUND CONDUCTOR PER "IG" COLUMN ALONG WITH THE GROUND OR EQUIPMENT GROUND CONDUCTOR. NG = DO NOT PROVIDE GROUNDING CONDUCTOR IN RACEWAY.

5. RACEWAY SUBSCRIPTS "Z" ARE AS FOLLOWS: P = PVC SCH-40, E = EMT, R = RIGID, AF = ALUMINUM F.EX, SF = STEELE F.EX, LT = LIQUID TIGHT FLEX, S = SEE SPECIFICATIONS FOR REQUIRED TYPE BASED ON USE AND LOCATION. *FAULT CURRENT CALCULATIONS BASED ON NON-MAGNETIC CONDUIT WORSE CASE SCENARIO.

6. ALL COPPER CONDUCTORS SHOWN ARE THWN UNLESS OTHERWISE NOTED.

TAG	TYPICAL OCP DEVICE	CONDUCTOR AMPACITY	CONDUIT SIZE	SIZE (AWG)	GND (CU)	IG (CU)	SE (CU)	NOTES
310S-4	300	310	4"	350	3	3	1/0	
1240S-3	1200	1240	(4) 3"	350	3/0	3/0	3/0	
2010Z-#	2000	2010	(6) 3"	400	250	250	3/0	
3040S-4	3000	3040	(8) 4"	500	400	400	3/0	
4180Z-#	4000	4180	(11) 4"	500	500	500	3/0	
EX	-	-	-	-	-	-	-	

NO.	REVISIONS	DATE

Kimley»Horn
©2020 KIMLEY-HORN AND ASSOCIATES, INC.
5370 KIETZKE LANE, SUITE 100, RENO, NV 89511
PHONE: 775-787-7552 FAX: 602-944-7423
WWW.KIMLEY-HORN.COM

PROJECT NO.: 096557018
DRAWN BY: JPN
REVIEWED BY: JDB
DATE: 08/17/2021

ASPEN AIRPORT BUSINESS CENTER ENERGY BOX STUDY

ASPEN, COLORADO

SCHEMATIC DESIGN

SINGLE LINE DIAGRAMS - HCE ASPEN OFFICE

E-606

096557018

9/2/2021 9:39:07 AM

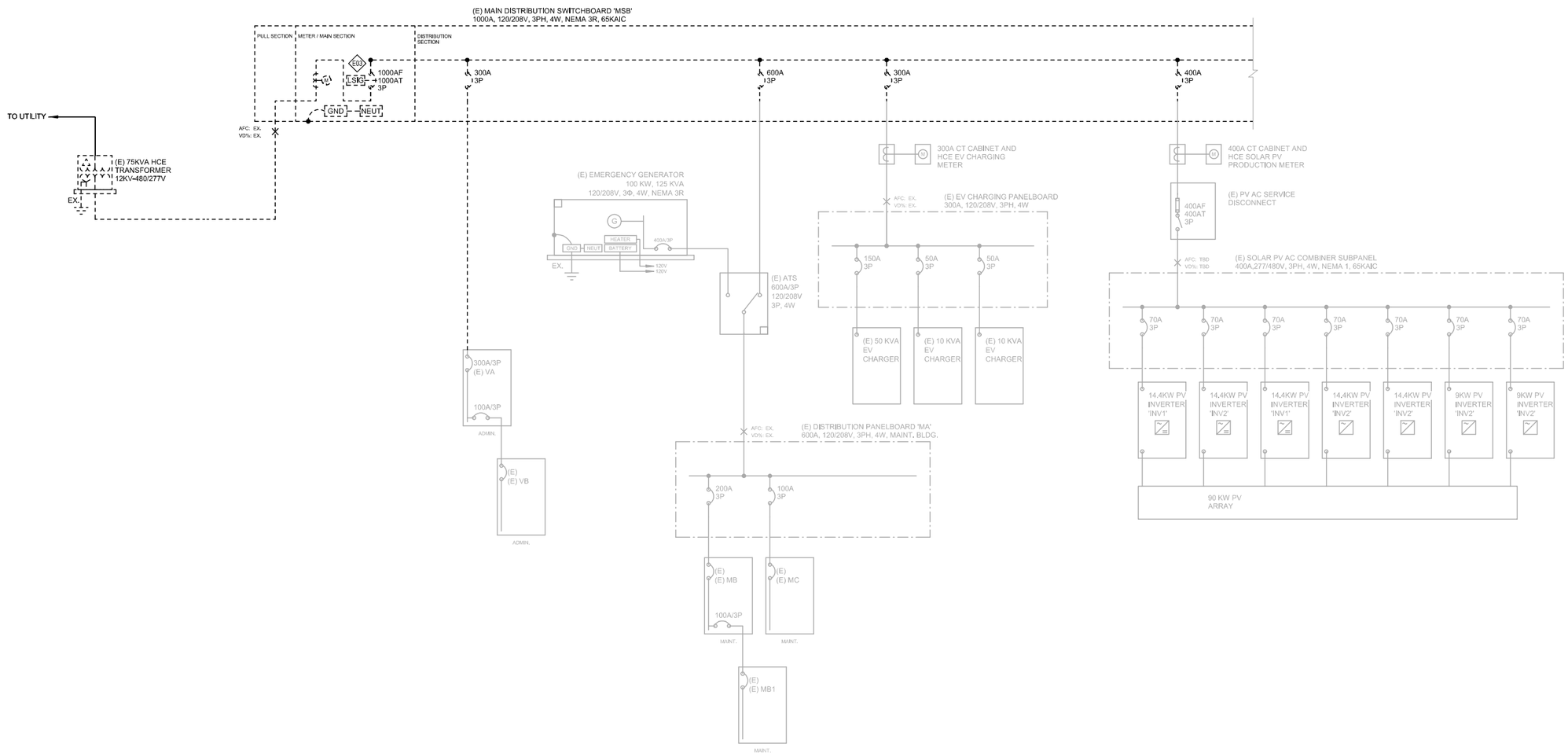

1 SINGLE LINE DIAGRAM - PCPW CAMPUS DEMOLITION

N.T.S

NO.	REVISIONS	DATE

Kimley»Horn

©2020 KIMLEY-HORN AND ASSOCIATES, INC.
5370 KIETZKE LANE, SUITE 100, RENO, NV 89511
PHONE: 775-787-7552 FAX: 602-944-7423
WWW.KIMLEY-HORN.COM

PROJECT NO.: 096557018
DRAWN BY: JPN
REVIEWED BY: JDB
DATE: 08/17/2021

ASPEN AIRPORT BUSINESS CENTER ENERGY BOX STUDY

ASPEN, COLORADO

SCHEMATIC DESIGN

SINGLE LINE DIAGRAMS - PCPW CAMPUS DEMOLITION

E-607

096557018

9/2/2021 9:39:07 AM

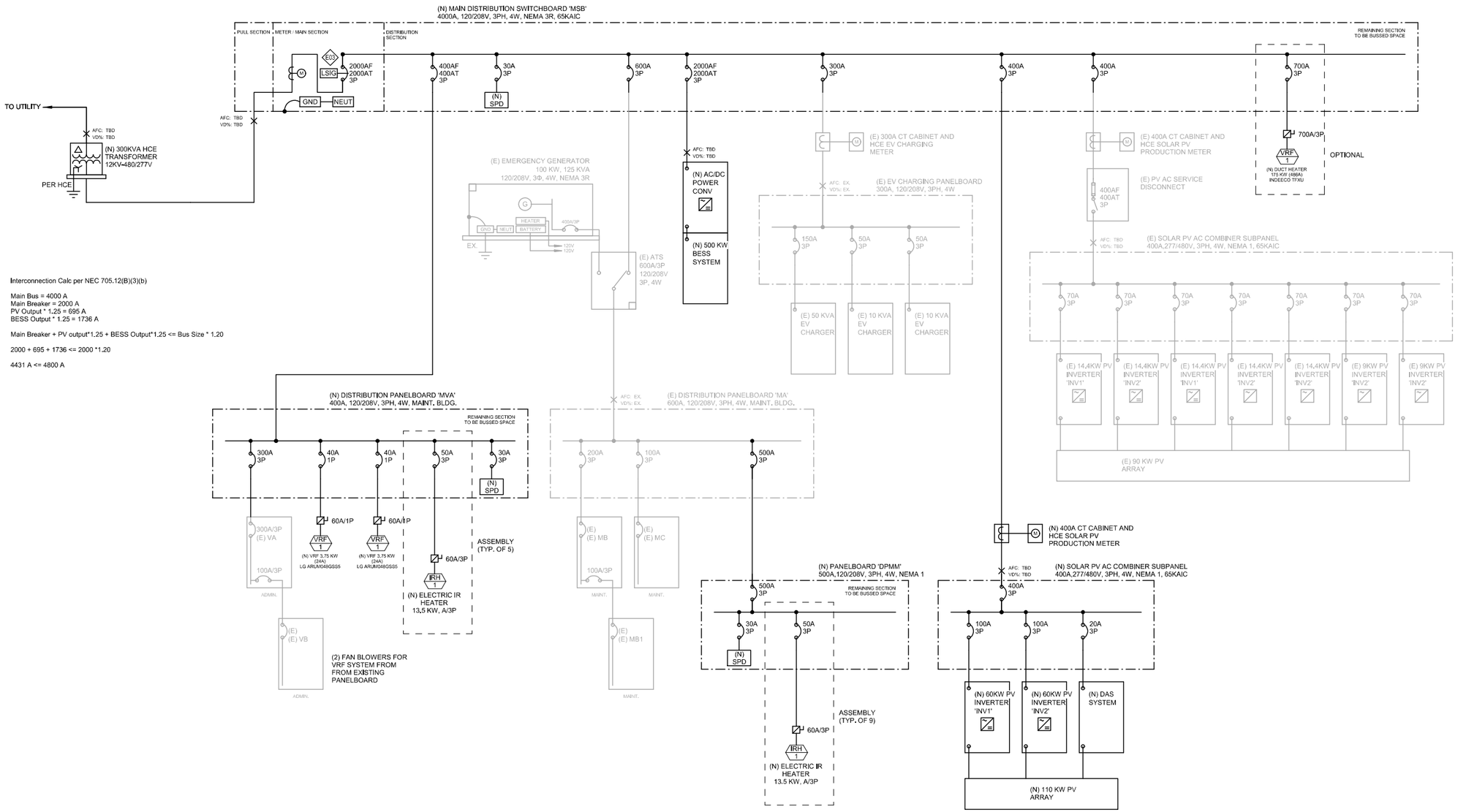

1 SINGLE LINE DIAGRAM - PCPW CAMPUS PROPOSED

N.T.S

NO.	REVISIONS	DATE

Kimley»Horn

©2020 KIMLEY-HORN AND ASSOCIATES, INC.
5370 KIETZKE LANE, SUITE 100, RENO, NV 89511
PHONE: 775-787-7552 FAX: 602-944-7423
WWW.KIMLEY-HORN.COM

PROJECT NO.: 096557018
DRAWN BY: JPN
REVIEWED BY: JDB
DATE: 08/17/2021

ASPEN AIRPORT BUSINESS CENTER ENERGY BOX STUDY

ASPEN, COLORADO

SCHEMATIC DESIGN

SINGLE LINE DIAGRAMS - PCPW CAMPUS PROPOSED

E-608

096557018

9/2/2021 9:39:07 AM

APPENDIX 3 – AABC Pitkin County Public Works Solar Memorandum

August 17, 2021

Roaring Fork Transit Authority (RFTA), Pitkin County, Colorado
ATTN: Jason White, RFTA Assistant Planner
530 E. Main St., Suite #302
Aspen, CO 81611

RE: Solar Feasibility Memorandum

Dear Jason,

Kimley-Horn has completed the solar analysis per the contract scope of work defined of Task 2.1 of Change Order Number: 052.2018 F-3-B. Our analysis is discussed in this memorandum.

TASK 2.1 – SOLAR EVALUATION

The goal of this task was to assess the feasibility of additional solar capacity for the PCPW Administration and Maintenance buildings. The below presents a solar conceptual system layout and sizing, energy production estimates, high level financial considerations, electrical interconnection considerations.

Conceptual Layout and System Sizing

The study area for this task was limited to the parking area closest to the road, to the South of the PCPW Administration and Maintenance Buildings. For the conceptual layout, Kimley-Horn assumed a carport structure covering the length and span of the parking spaces.

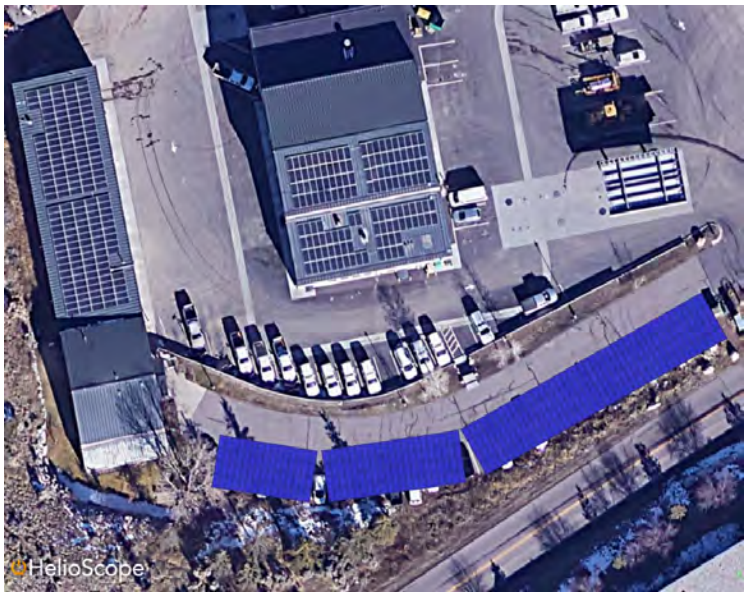

Figure 1: Carport Conceptual Solar Layout

To model the layout, we assumed a standard fixed-tilt carport structure with a bottom height of fourteen (14) feet and a tilt angle of 5-degrees. The array azimuth was aligned with the parking spaces at 150-degrees, 171-degrees, and 189-degrees. To account for array shading by nearby objects, the trees to the South and East of the array were modeled.

The electrical components for the solar model were defined as shown below. The equipment selection serves as a representative basis of design but note that final equipment selection may vary if the project were to move forward.

PV System Configuration

- (312) Trina Solar, TSM-DE15M(II)-400(400W) PV Modules
- (4) CPS SCA25KTL-DO/US-208 25 KW Inverter

Conceptual Design Nameplate

- 124.8 kW DC
- 100 kW AC

The following assumptions and considerations were made in the modeling of the conceptual solar carport design:

- Carport layouts to be contained within existing Southern parking lot area only.
- PV module selection to be from a Bloomberg Tier-1 manufacturer.
- Inverter selection to be from a major manufacturer commonly used in carport applications.
- AC system voltage to be 208Y/120V
- DC/AC Target Range: 1.20-1.30
- Structural considerations were **NOT** made for this conceptual analysis.

Solar Energy Production Estimate

From the model described in the previous section, Kimley-Horn simulated solar production in Helioscope to determine the estimated annual energy output for the solar carport design. The full production reports are available in the appendices of this report and a summary of the reports are provided below.

Production Report Analysis

- *Estimated Annual Production (Megawatt Hours)*
    - *P50 Estimate*
        - Carport: **154.7 MWh**
    - *P90 Estimate*
        - Carport: **152.3 MWh**
    - P50 and P90 estimates represent energy production outcomes that can respectively be expected 50% and 90% of the time. The P90 estimates will be used for the cost analysis portion of this work.

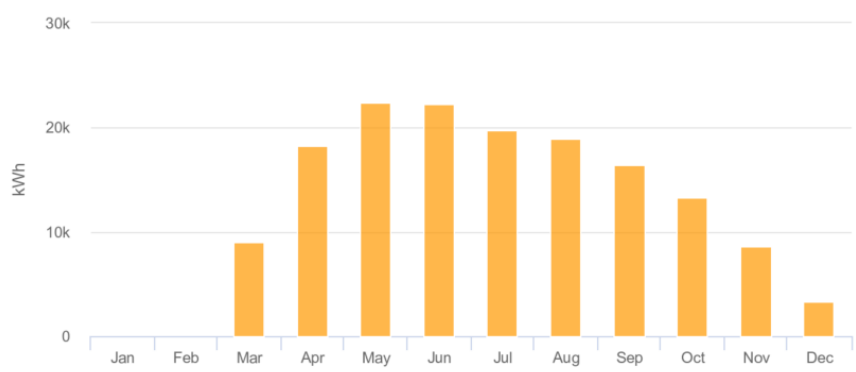

Figure 2: P90 Estimated Solar Production by Month

- *Loss Assumptions*
    - For the analysis, it was assumed that the panels would have a high percentage of soiling losses due to heavy snow cover in the winter months.
    - December and March – 50% soiling
    - January and February – 100% soiling
- *Comparison against annual energy usage*
    - Annual Building Energy Usage (Nov 2017 – Oct 2018): **144.97 MWh**
    - Carport Annual Usage Offset (%): (Solar Production / Energy Usage)*100 = **105%**
    - Combined Existing and Proposed Solar Offset:
        - (152.3 MWh + 53.78 MWh) / 144.97 MWh = **144%**

Cost Estimates

Having established the annual production for the solar design, this section will provide an analysis of the expected costs to deploy each design and a preliminary review of incentives available to the project. Note that this economic analysis is based solely on publicly available data sources.

System Cost

To determine the estimated cost of the carport design we based our analysis on the latest Solar Industry Update report available (Q4 2019/Q1 2020) from the National Renewable Energy Lab (NREL). Based on the NREL report, for PV systems of the size estimated we expect the engineering, procurement, and construction costs to be in the range of $2.90/Watt and $2.20/Watt. For the purposes of this analysis, we assumed an average all-in cost of $2.50/Watt. Under this assumption we determined the total cost for the proposed design to be:

- Estimated System Cost (Engineering, Procurement, Construction)
    - System Size: 124,800 Wdc
    - Cost Basis: $2.50 / Wdc
    - Est. Project Cost: **$312,000**

Available Incentives

There are several options and incentives available to real estate owners when deploying solar systems on their property. These options and their dollar impact relative to the proposed designs are presented below.

Federal Investment Tax Credit

The US Department of Energy offers federal incentive tax credits (ITCs) for residential and commercial solar developments where the owner is paying for or financing the installation. The tax credit currently allows residential and commercial owners of solar systems to credit 26% of the system cost against their federal income taxes. This tax incentive is set to be phased out at the end the of 2022, with the tax credit being reduced to 22% in 2023, and to 10% for commercial owners only in 2024 and onward.

However, as the Pitkin County is a tax-exempt entity, it is not eligible to claim this incentive.

CORE Randy Udall Energy Pioneer Grant Program

As of May 2021, the CORE Grant is back and accepting applications on a rolling basis. The grant is available to public agencies, schools, nonprofits, and businesses pursuing energy efficiency, carbon reduction, affordable housing, and renewable energy projects. The CORE grant can cover up to $50,000 or no more than 50% of the project cost when combined with other incentives, whichever is lower.

Utility Tariffs and Incentives

The local utility, Holy Cross Energy (HCE), has several incentives and tariffs to support renewable energy projects. However, given the size of the proposed system we don't believe this project will qualify for many of the options that HCE makes available to customers with smaller system sizes. Below is a brief review of HCE's incentives and applicable tariffs for renewable energy projects. For the purpose of this analysis, we will assume that the project will only be eligible to claim the Distributed Energy Generation (DEG) Resource Tariff and the non-taxable entity incentive.

Incentive and Tariff Review

- Net Metering
    - HCE's net metering policy allows customers to offset their electrical usage by the generation produced by their renewable generation installation.
    - If the renewable generation is less than the customer's electrical usage for a given billing period, the customer pays the difference of the electrical usage minus the solar generation, billed at their standard tariff rate with HCE.
    - If the renewable generation exceeds the customer's electrical usage in a given billing period, the excess generation is banked and will be carried forward to the next month's billing cycle.
    - On an annual basis, any unused banked generation will be paid back to the customer at HCE's current wholesale rate.
    - **Applicability**
        - Based on HCE's current Renewable Energy Net Metering Service Tariff, as of October 2020 this option is only available to customers with:
            - Renewable generation systems no greater than **25 kW**.
        - Applicable commercial customer tariffs include:
            - General Services – Small
            - General Services – Large and Irrigation
            - Or under a single meter
    - **Special Cases**
        - On a case-by-case basis HCE will allow systems higher than 25 kW to apply for this service.
        - For the purpose of this analysis we assume the project will not qualify for net metering, but if the project moves forward it is worth exploring this option with HCE.

- Distributed Energy Resource Generation Service
    - This service operates in a similar fashion to the Net Metering service in that it allows customers to offset their electrical usage with their renewable generation.
    - However, this service differs from net metering in the value assigned to the renewable generation. Where net metering allows a dollar for dollar offset, this service provides dollar credits to the customer's renewable generation based on HCE's current wholesale electricity rate.
    - If the dollar credits produced by the customer's renewable generation are less than the cost of the electric services provided to the customer, the customer will pay the net difference to HCE.
    - If the dollar credits produced by the customer's renewable generation exceed the cost of electric services provided to the customer, HCE will pay the net difference to the customer.

- **Applicability**
    - This service applies to renewable generation between 25 kW and 500 kW.
    - HCE allows a total of 3000 kW of capacity to be contracted under this tariff in any given year. This can serve as a potential restriction depending on when the project applies for this service.
    - Applicable commercial customer tariffs include:
        - General Services – Small
        - General Services – Large and Irrigation
        - Or under a single meter

- Non-Taxable Entity Incentive
    - For non-taxable entities, HCE offers an incentive equal to 40% of the installed cost (on a $ per kW basis) up to $500/kW for the first 25 kW on renewable generation at a site.

- Renewable Generation Service Tariff
    - This optional service applies to renewable generation between 50 kW and 500 kW, and provides more advantageous pricing for offsetting electrical usage than the Distributed Energy Resource service.
    - However, this service has been phased out as of December 2018 and is no longer available to customers.

- Renewable Energy Credit (REC) Program
    - Renewable energy credits are available to customers under the Net Metering service.
    - The REC program pays the customer a $ per kW value based on the size of the project and up to a total system size of 25 kW.
    - We do not believe that the proposed project will qualify for this program.

DEG Resource Tariff and HCE Incentive Offset Analysis

For the below analysis, the wholesale electric rate is based on the average wholesale electric price ($/kWh) for the nearest reporting region from January 1, 2021 and July 13,2021. This data is provided by the U.S. Energy Information Administration (EIA) and is sourced from the Intercontinental Exchange (ICE).

DEG Resource Tariff

- Avg. Wholesale Electric Rate: $44.35 / MWh
- P90 Estimated Annual Solar Generation: 152.3 MWh
- Estimated Annual Electric Cost Offset: $6,754.50

HCE Non-Taxable Entity Incentive

- Incentive Rate: $500 / kW
- Eligible System Capacity: 25 kW
- Incentive Offset: $12,500

High Level Cost Summary

The cost summary below assumes the project capitalizes on all grants and incentives available to Pitkin County.

- System Cost: $312,000
- CORE Grant: $ 50,000
- HCE Incentive: $ 12,500
- Year 1 Electrical Offset: $ 6,754
- Year 1 System Cost: **$242,746**

Interconnection Considerations

Reviewing the existing electrical infrastructure for the site, it is assumed that the new solar system would parallel with the existing utility service and rooftop solar installation at the utility service transformer, behind the meter. We have identified the following aspects of the system that require further consideration if the project moves forward:

- The size of the current utility service transformer is 75 kVA based on the information available it is expected that the size of the transformer will need to be increased to accommodate the additional generation.

- Load side solar connections are generally limited to be no larger than the size of the utility service:
    - The existing utility service appears to be 1000 amps.
    - The existing rooftop solar site has a 350-amp line side connection.
    - The proposed 100 kW carport system will contribute an additional 350-amps at the line side, bringing the total line side solar connections to 700-amps.
    - *The proposed solar upgrade is within the bounds of what the electrical code will allow but the electrical service size should be verified before moving forward.*

Microgrid and District Energy Feasibility report

Aspen Airport Business Center (AABC)

Prepared By:

RMH GROUP
engineering + design

Prepared for:

HOLY CROSS ENERGY
EST. 1939

EVALUATION OF MICROGRID IMPROVEMENTS AND DISTRICT ENERGY SYSTEM OPTIONS

DECEMBER 7, 2021

TABLE OF CONTENTS

1. Executive Summary 3
Aspen Airport Business Center Microgrid: 3
Microgrid System Improvements: 3
Microgrid Resiliency Performance: 3
Aspen Airport Business Center District Energy: 3
District Energy System Performance: 3
District Energy Conclusions and Next Steps: 4
2. Introduction 5
Microgrid Introduction: 6
District Energy Introduction: 6
3. Description of Existing Conditions and Planned Improvements 7
Facility Details: 7
4. Analysis of Electrical and Thermal Loads 10
Existing Loads: 10
Electrical Loads: 10
Gas Loads: 11
New Loads: 12
Converted loads: 12
New Snowmelt loads: 12
5. Microgrid System Improvements 14
Existing Conditions: 14
Present tariff requirements: 14
Storage Option Comparison: 14
Central Battery Capacity: 16
Microgrid Analysis by Section: 17
Service Center Road: 17
Brush Creek Park & Ride, and the 5MW PV Array: 17
Aspen/Pitkin County Airport 17
Network and Communications 17
Nodes and Information 17
Installation of Physical Components 18
Protection of the System 19

6. District Energy Options and Analysis 21
District Energy Options: 21
District System #1 – Electric Boilers (Baseline) 22
District System #1a – Electric Boilers with storage 22
District System #1b – Electric Boilers with molten salt storage 23
District System #2 – Ground source heat pump with storage 23
District System #2a, 2b,and 2c – Ground source heat pump variations 24
District System #3 – Hydrogen fuel cell and electric boiler and storage 25
District System #4 – Air source heat pump with electric boiler and thermal storage 26
Other Considerations for District Energy Systems: 26
Other Potential District Energy Options 27
District Systems types that were not considered to be feasible 29
The Leading District Energy option: 29
The Case for a Utility Operated District Energy System: 31
Conclusion and recommendations: 32
7. Microgrid Performance 33
Resiliency Analysis 33
8. Summary and Recommendations 35
Microgrid Summary and Recommendations: 35
District Energy Summary and Recommendations: 35
9. Drawings and Appendices 36
9.1 - Microgrid One line Diagram (1 page) 36
9.2 - SEL-3355 RTAC Unit (4 pages) 36
9.3 - SEL-3505 Automation Controller (2 pages) 36
9.4 - SEL-751 Protection Relay (3 pages) 36
9.5 - SEL-451-5 Protection Relay (4 pages) 36
9.6 - SEL-FLT-FLR Fault and Load Transmitter & Receiver (2 pages) 36
9.7 - G&W Automated Solid Dielectric Switchgear (8 pages) 36
9.8 - Largo Vanadium Flow Battery (2 pages) 36
9.9 - District Energy System Schematics (10 pages) 36
9.10 - Wastewater Treatment Plant Schematic (as posted on ACSD website, 1 page) 36

1. EXECUTIVE SUMMARY

Aspen Airport Business Center Microgrid:
A microgrid is being considered for the Aspen Airport Business Center ("AABC") energy corridor. The goal of the microgrid would be to make better use of the renewable energy production area, provide grid flexibility with an energy storage system (ESS), and provide resiliency by maintaining electrical service in the event of an outage on the larger electrical grid.

Microgrid System Improvements:
This report discusses the existing utility electrical system in the area and the components and infrastructure upgrades that would be required to form the microgrid. The advantages of different configurations and locations of batteries are evaluated. The various facilities, communication, controls and protection are also discussed. A conceptual one line diagram of the system with phased microgrid improvements noted is included in the appendix.

Microgrid Resiliency Performance:
A microgrid with the electrical generation from the Pitkin Solar farm, battery storage, backup and emergency generators at some facilities, and controls can operate independently from the rest of HCE's electrical network in the case of a disruption or outage. The length of time that the microgrid can successfully island from the grid depends on many factors including the size and state of charge of the batteries, the solar resources, and the electrical demand during the outage period. The types of systems used to replace the gas fired heating within the microgrid will significantly impact the electrical demand. A table is provided in section seven, Microgrid Performance, illustrates the percentage of the year in which the microgrid can be self sustaining for either four hours or four days under various scenarios. For four hour outage this percentage might be as low as 43% with only a 2 MWH battery and inefficient system and as high as 99.7% with a 12 MWH battery and efficient system. With higher solar power generation and lower loads, the microgrid is self-sustaining more of the time during the summer and less during the winter.

Aspen Airport Business Center District Energy:
A district energy system is technically feasible for the public facilities in the AABC, economic feasibility will depend on the type of system, avoided infrastructure costs, and other factors outside the scope of this report. The advantages of the district system would be the ability bring together heat sources and loads and provide heating without the combustion of fossil fuels while managing peak power demand. The primary headwind would be the distance between buildings (sometimes as much as 2000ft) with hills, highways and runways in between.

District Energy System Performance:
Several different configurations and types of equipment were studied for feasibility and performance in a district energy system for the AABC energy corridor. No systems were considered that burned fossil fuels and all systems met the corridors heating loads including the more than quarter million square feet of snowmelt proposed for the airport. Most of the systems worked to provide demand control and grid flexibility with thermal storage, as heat storage also appears to be the best way to limit the size of infrastructure improvements required to meet the highly variable snowmelt load.

Descriptions of the district energy options and tables comparing their performance can be found section six. In general ground source heat pump systems provide the highest efficiency and can configured to provide some grid flexibility, only GSHP systems limit the heating energy to the point where the microgrid area generates more electricity than it consumes. Direct electric systems are feasible but inefficient, hydrogen fuel cell or engine systems have mediocre performance and would require massive hydrogen storage infrastructure, and air source heat pumps struggle as a district system in the areas cold climate. Thermal storage infrastructure appears to provide good demand control with large but attainable tanks in the one to two million gallon range.

District Energy Conclusions and Next Steps:

The primary benefit of the district system is to bring together a heat sources and loads for mutual advantage. Several different system options were evaluated. Direct electric resistance heating is simple but consumes more electricity than the solar field produces. Systems that generate and use hydrogen allow for seasonal storage of energy but use even more electricity due to losses in the generation and compression of hydrogen, and the storage of hydrogen would be challenging. Air source heat pumps, coupled with electric boiler backup, were investigated but the performance was mediocre due to cold ambient temperatures. The best performing systems were those using ground source heat pumps and thermal storage.

A large geo-exchange bore field used as a heat source for ground source heat pumps is a feasible and high performance option for a district system in this climate. Another appealing option would be to recover heat from the effluent of the wastewater treatment plant. This could both help meet the heating needs of the energy corridor and also potentially help meet regulatory requirements for the wastewater treatment plant as some plants are required to reduce effluent temperature in the winter to prevent changing the temperature of the river into which they are discharging. Another advantage to a district system would be to enable access to thermal storage for multiple facilities. It might be necessary to provide thermal storage at the airport to not exceed the electrical capacity of HCE's system and still deliver enough power to operate the proposed snowmelt system. Once storage is being utilized it can be used to provide peak heating to buildings as well as addressing snowmelt.

Next Steps:

- Monitor the airport design and provide feedback on the limits of the electrical system and consider a partnership to provide heating service with thermal storage to the facility, under utility control, so that it also benefits the utility through grid flexibility.
- Meet with operators at the Aspen Consolidated Sanitation District's wastewater treatment plant to discuss the possibility effluent heat recovery.

2. INTRODUCTION

Holy Cross Energy and its member-owners and community partners in the vicinity of the Aspen/Pitkin County Airport are exploring ways to accomplish two goals: To eliminate carbon dioxide emissions and to increase resiliency during disruptions to energy infrastructure. Microgrids and district energy systems are often touted as ways in which to accomplish those goals. This group of buildings is referred to as the "Energy Corridor" or "Energy Box". Specific microgrid arrangements and district energy systems are developed and evaluated in the analysis sections of this report for their engineering feasibility and performance in relation to the goals of the energy corridor.

The major facilities under consideration are highlighted in the map below, they are generally government, utility, or public buildings. Although private commercial or residential facilities could also benefit from being included in either a microgrid or district energy system, the owners of these buildings have not yet been involved in conversations about district energy. The other buildings, in aggregate, are a substantial load, each building by itself is a small load compared to the larger buildings already included in the energy corridor. One exception would be if Colorado Mountain College were to build a new building on their campus close to the RFTA buildings, if the building were large enough and construction timing right the district energy system might be an attractive option.

Figure 2.1 – Buildings in the Energy Corridor

Microgrid Introduction:

The goal of a microgrid system, in this application, is to serve the loads in the Energy Corridor with carbon free renewable energy, and to add resiliency to the system by having the ability to disconnect from the regional power grid and maintain power service to the critical buildings in this area. The main power source for the microgrid will be a the new Pitkin Solar array and an associated energy storage system, which has not yet been constructed but is planned for the next phase of construction. A larger energy storage system (ESS) is planned to enhance the dispatchability of the PV power and assist with resiliency. Loads have been analyzed to determine a size range for this ESS. The range includes minimum sizing to increase the effectiveness of the PV array to level off peak demands and continue steady renewable power input into the load when solar input fluctuates. A maximum range is also provided to determine the storage necessary to serve power to the critical buildings during a multi-day regional grid outage.

Methods for adding infrastructure and network control components are presented to set up the microgrid boundaries and to make the best use of available distributed energy resources (DER). The ESS will serve as base power source when the microgrid is in island mode. The PV array will feed into the microgrid or into the ESS to optimize the local system in using all renewable energy generated.

District Energy Introduction:

The buildings within the energy corridor currently rely on individual building systems for heating and cooling. A mix of systems are used, most are gas fired, some use electricity as an energy source. In order to eliminate the use of fossil fuels and their emissions, significant additional electric load would be added. For many of these systems the simplest approach will be to use electric resistance heating to replace fossil fuel burning equipment but this is less efficient than other options. Air source heat pumps are appealing for their cost and do promise a higher efficiency than resistance heating. However, in cold climates temperatures can fall below their operating limits requiring a backup heating system. Ground source heat pumps, drawing on a properly sized geo-exchange field offer consistent operation and excellent efficiency, three to four times that of electric resistance heating.

Another consideration for the energy corridor is the peak electrical demand. For the HCE system the demand peak is driven by heating and the number of people visiting the region in the winter. One approach to controlling electrical demand would be to bring the buildings onto a district system and include thermal energy storage to act like a battery, charging when electrical supply is plentiful and cheap, and discharging when electrical energy is in short supply or expensive. These systems benefit from economies of scale and so the larger the load that can be aggregated the better the cost effectiveness of the system. The major hurdles with a district energy system in this location will be the low building density, obstacles such as highways and runways that separate the buildings, and the low monetary cost of energy vs costs of construction.

3. DESCRIPTION OF EXISTING CONDITIONS AND PLANNED IMPROVEMENTS

The following sections provide brief descriptions of each of the major facilities within the energy corridor and the planned improvements or modifications to those facilities.

Facility Details:

Aspen/Pitkin County Airport complex
The airport includes several different buildings and additional, separately metered loads.

- Airport Terminal – The public building and terminus for commercial airlines. The existing building will be replaced with a new terminal in the next couple of years. The new building would be 80,000 to 95,000 square feet It is anticipated that the new facility will be all electric, with no natural gas service.

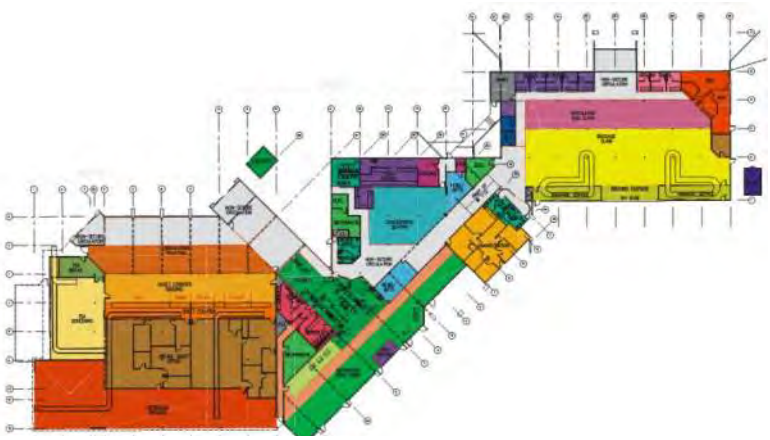

Figure 3.1 – Existing Airport Terminal (source – 2012 Airport Master Plan Update

- Airport Apron and walkway snowmelt – As part of the redevelopment the airport plans to add 278,600 square feet of snowmelt, also with electrical source energy
- Airport Base Operations – An existing facility using both electricity and gas. To eliminate fossil fuels from this facility the gas fired boilers and IR heaters would be replaced with electric equipment. The facility includes a small snowmelt area at the north entry. This facility has a 500kW diesel generator.
- Airport Tower – This facility is not addressed in the energy box report and is assumed to remain as is for all analysis. The consistent daily and annual loads make it likely that most of the electricity consumed by this facility is used to power data and communication equipment that is consistently loaded.
- Airport Lights – This meter appears to measure power consumed by airport lighting, potentially including runway and taxiway lights. The energy box report indicates that some energy savings could be expected by replacing incandescent or halogen lights with more efficient sources. The loads are maintained as is for the analysis in this report.

Pitkin County Public Works Buildings:

- Administration and Maintenance buildings – these buildings house office space and vehicle maintenance bays along with a vehicle wash station. All heating is gas fired with a split system furnace for the office space and a mix of unit heaters and infrared tube heaters for the vehicle bays. This facility also has a 100kW generator and a 100kW photovoltaic solar array. To eliminate this facility's scope 1 carbon emissions the gas fired furnace would be replaced with a heat pump (either single zone VRF or a conventional heat pump)

- Animal Shelter – This appears to be one building with three electric meters. One of these meters shows much higher use during the winter than the summer indicating some form of electric heating. No changes or upgrades are modeled for this facility as it is a smaller building with unknown systems and emissions
- CDOT Office, Sand facility and cabin – Two of these meters are very small loads and one is somewhat larger (still with a peak <10kW) that shows increased winter demand. No changes or upgrades are modeled for this facility as it is a smaller building with unknown systems and emissions

RFTA Maintenance Facility:

- This is a 62,400 square foot facility with office space (12,000 square feet), bus storage and maintenance space (remaining square footage). It is served by a variety of HVAC systems including a ground source heat pump system, gas fired boilers, a waste oil fired boiler, and gas fired infrared heaters for the vehicle bays. There is a snowmelt zone on the east side of the building served by the central boiler system. To eliminate scope 1 carbon dioxide emissions from this building the natural gas and waste oil boiler would be replaced with electric boilers and gas fired infrared heaters would be replaced with electric infrared heaters.

RFTA Maintenance facility – Source Aspen Journalism Article

- Electric Bus Charging – The bus charging system is on a separate electrical meter from the main building. This is a larger load, sometimes exceeding 500kW and charging appears to occur over night in a 5-7 hour window. Although RFTA has expressed some interest in converting to hydrogen busses no changes are modeled or anticipated for bus charging.
- Bus Stations – In addition to the maintenance facility there are two bus stations that appear to have some demand peaking in the winter. Some of this demand may be small electric snowmelt zones. No changes are anticipated.

Holy Cross Energy Office – This two story office building is divided into three suites with the utility offices occupying the majority of the building. The building is heated by gas boilers. In order to eliminate scope 1 carbon dioxide emissions from this building the gas boilers would be replaced with electric boilers.

Aspen Consolidated Sanitation facility – This wastewater treatment plant is located down by the river between RFTA and the HCE office. There are three meters for this facility, a main meter and one for

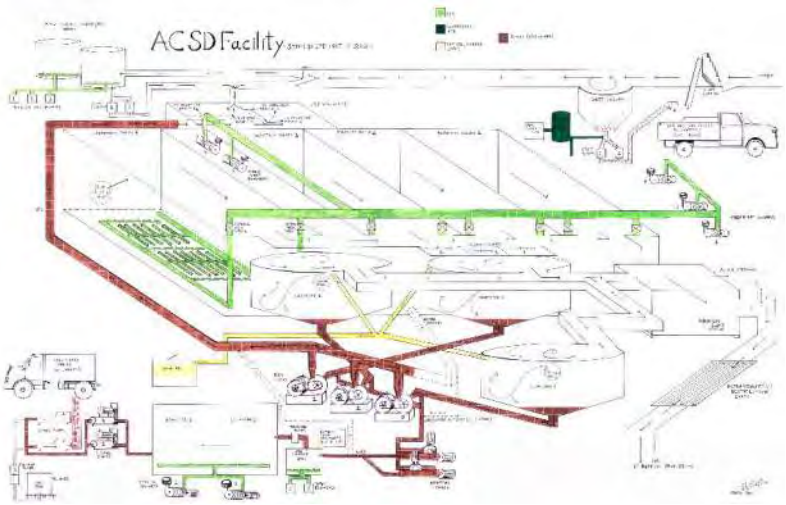

Schematic of Wastewater Treatment Process – See larger version in the appendix – Source: Aspen Consolidated Sanitation District website.

each of two digesters. The electrical loads appear to track more with wastewater flow (higher during peak tourist seasons) than with temperature. A schematic of the treatment process is shown in the appendix. It is not known if the facility has a natural gas service or recovers any biogas on site. The facility does have a generator capable of supporting its electrical loads. There are several potential ways that this facility could benefit the other buildings in the energy box, depending on the specifics of the wastewater treatment process. First, digesters often produce biogas (a mixture of mostly methane and carbon dioxide with smaller quantities of other gasses). This can sometimes be considered a renewable fuel and potentially carbon neutral as its ultimate source is plant and animal matter. And even though agricultural processes are not carbon neutral it is at least preferable to use the gas for beneficial use instead of the minimally compliant process of burning it in a flare. The digesters require heating but they typically produce more energy than is required for heating. If biogas is available to the microgrid or district system it could be considered as a resource. The other potential resource from the wastewater plant is the thermal energy in the effluent stream. The treated wastewater that is discharged to the river may be used as a heat source. In fact at some wastewater treatment facilities this effluent must be cooled to meet discharge regulations. Based on a comparison of wastewater flows at this facility compared with other facilities producing biogas a rough estimate of the energy available from biogas is 650 MWh per year while the heat available from the wastewater could be as much as 1900 MWh per year.

4. ANALYSIS OF ELECTRICAL AND THERMAL LOADS

Existing Loads:

In order to determine the electrical performance of the energy corridor and to inform the microgrid analysis an hourly dispatch and consumption model was created for the energy corridor. This model used existing load data to develop relationships between electrical consumption and seasons, times of day, and temperature to generate a predictive model of the electrical demands and consumption in a typical year. Only annual gas consumption numbers were available, and this data for only some buildings, therefore the usage model uses assumptions and engineering judgement to predict hourly usage.

Electrical Loads:

Electrical data for all the buildings identified as part of the energy corridor was analyzed from 2019 through October of 2021. Although this time period includes impacts from the extraordinary disruption caused by the coronavirus pandemic it also includes recent changes in loads that needed to be captured such as the introduction of electric busses. Where necessary the loads have been adjusted to mitigate the impact of lower usage and occupancy during the pandemic.

Chart 4.1 below shows electrical loads for the sum of all meters starting in 2019 on the left hand side of the chart and extending to October 2021 on the right. The annotation on the chart indicates the impact of different seasons, events, and added loads. The colors illustrate base load in blue fading up to peak loads in red.

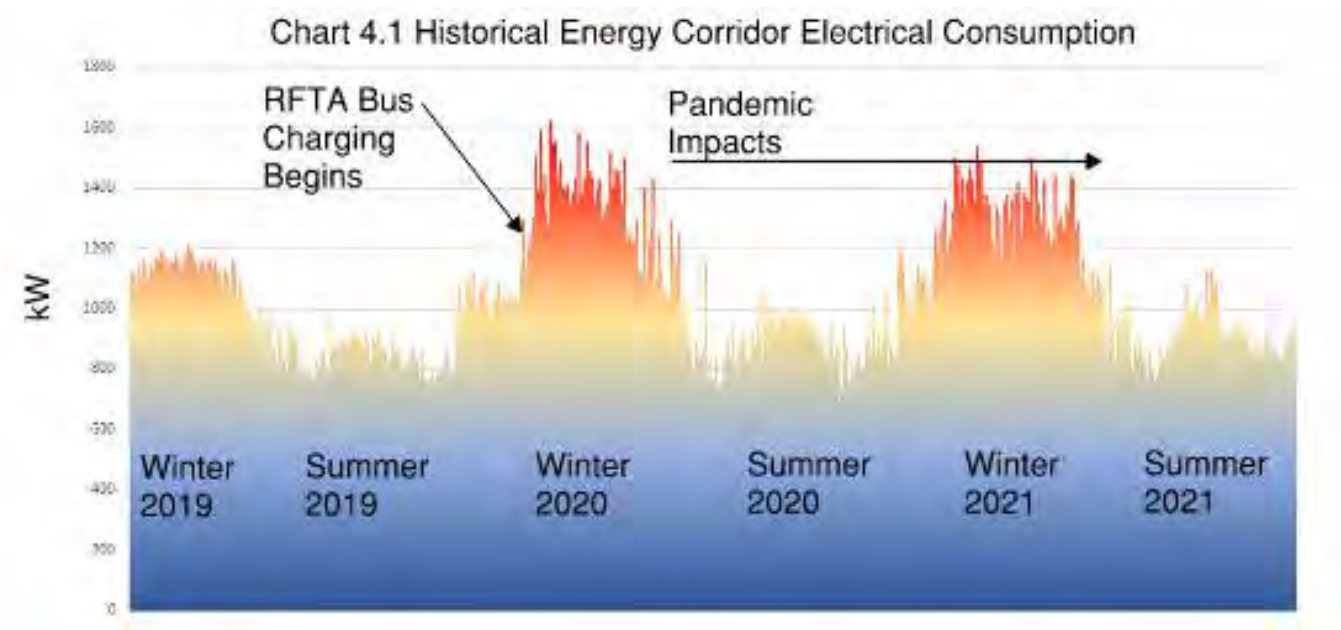

From Chart 4.1 we can see that loads are highest in the winter, lowest in spring and fall, and have a lower secondary peak in the summers. You can also see the impact of bus charging on the total load as load increases almost across the board once charging begins. This information alone is not enough to determine the true nature of electrical consumption. It is hard to see from this chart that the peaks in the winter actually occur in the late evening (10pm) and are driven by bus charging.

By looking at individual meters for buildings and discrete elements such as snowmelt or lighting loads we are able to determine specific relationships for each of those loads. The wastewater treatment plan power and bus

charging power consumption appears to track seasonal occupancy (how many people are in the area to flush toilets and ride busses). Snowmelt loads generally track temperature (or temperature and moisture for the more sophisticated systems). There is an increase in many of the building loads during colder weather as a result of electricity used for heating (likely both fans for gas fired units, compressors for heat pump systems, and electric resistance heating). Chart 4.2 shows an overlay of some of the larger loads in the corridor.

Chart 4.2 Historical Electrical Consumption, Large Loads

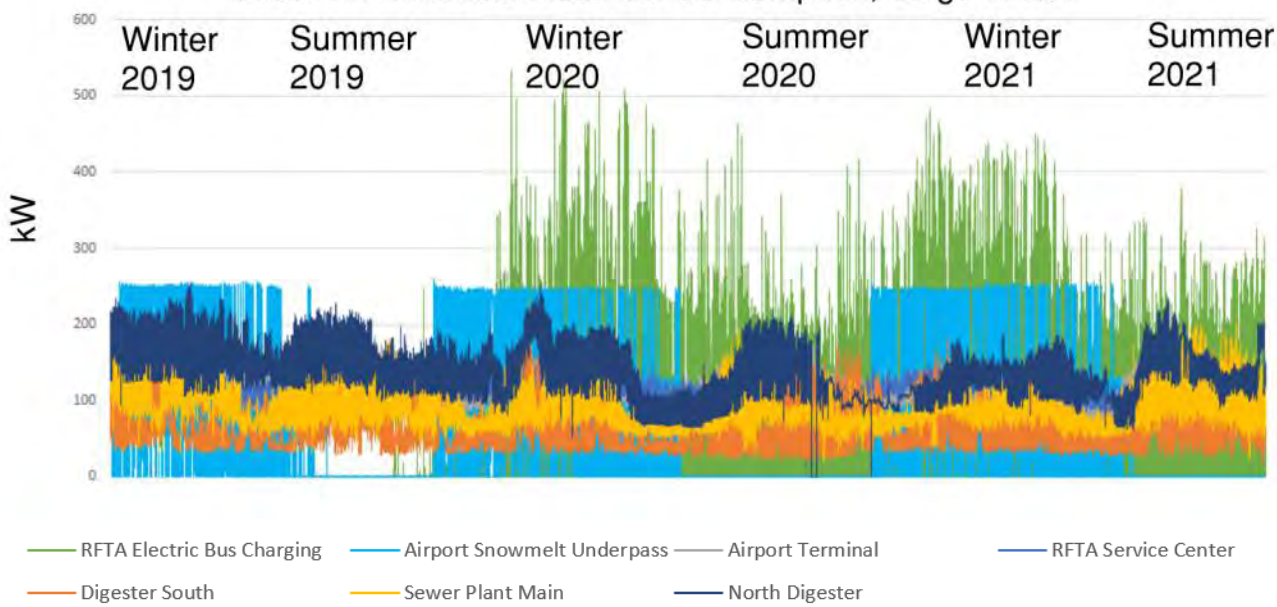

The measured annual energy consumption for all meters is shown in Table 4.3 for 2019, 2020, and was prorated for 2021. Also shown is the annual consumption from the Energy Box report (refer to appendix). The difference between the numbers tabulated in this report stem from the inclusion of the water treatment plant (2,618 MWh/year) and the airport underpass snowmelt (639 MWh/year) as well as other smaller usage meters. The energy box report also underestimated the energy used to re-charge the busses which looks to reach 495 MWh/year in 2021.

Table 4.3
Electrical Energy Consumption in the Corridor

Year/Source	Electricity in MWh
Energy Box Report	2,729
2019 Meters	7,225
2020 Meters	6,790
2021 Meters (prorated)	6,912

Gas Loads:

The existing gas loads from the energy box report include the largest buildings with the exception of the wastewater treatment plant. It is not known if the wastewater treatment plant has a gas service or not, if biogas is recovered or used and if there are heating upgrades needed to eliminate on site emissions. Table 4.4 shows the gas usage of the facilities included in the energy box report in both therms and in megawatt hours for direct comparison to the electrical data. This data is presented using the existing airport gas use. It is understood that the new airport will be all electric and it is likely that the new building will be more efficient.

Table 4.4
Electrical Energy Consumption in the Corridor

Year/Source	Gas in Therms
Energy Box Report	95,528
	Gas in MWh
	2,799

New Loads:
There are two types of new loads expected in the energy corridor. The first are heating loads converted from gas to electricity per the descriptions of facility improvements described above. The second is the new and expanded snowmelt associated with the planned construction at the airport.

Converted loads:
For each building where natural gas fired heating equipment would need to be replaced with electric source heating to eliminate carbon emissions we have evaluated how much of that load can be readily served by a heat pump and which are likely to require electric resistance heating. Based on are view of the systems listed in the energy box report Table 4.5 below shows the anticipated percentage of load that would be addressed with heat pumps or with electric resistance in two scenarios. The first scenario aligns with the facility improvements described above. The second would maximize efficient electrical heating but would require more extensive improvements or a district energy system. Even in this scenario some equipment such as vehicle bay IR heaters would still use electric resistance heating.

Table 4.5
Gas to Electric Loads

Scenario	Heat Pump	Electric resistance
Described Improvements	73%	27%
Maximum Efficiency/DE	93%	7%

New Snowmelt loads:
The currently proposed scope for the new airport includes a hydronic snowmelt system covering more than 278,000 square feet on the aircraft apron and walkways. This system represents a significant load within the energy corridor, potentially dwarfing all other loads during snowfall events. RMH has estimated the snowmelt requirements and energy use based on established snowmelt design criteria and assumed well drained soil with a similar heat capacity to that found by the geotechnical survey at the RFTA building. The analysis presumes insulation under the slab and a smart controller with access to weather forecasts to control heating. The performance model incorporates wind, precipitation, and warming of the slab from sunlight. The maximum system output was capped at 250btuh per square foot, which appeared to melt snowfall within the same hour for all but three snow events each year.

Chart 4.6 below shows the heat needed for the snowmelt system in kW for a typical weather year. This is functionally equivalent to the electrical power required if this system were to be served by an electric boiler without energy storage or any other strategy to limit system demand.

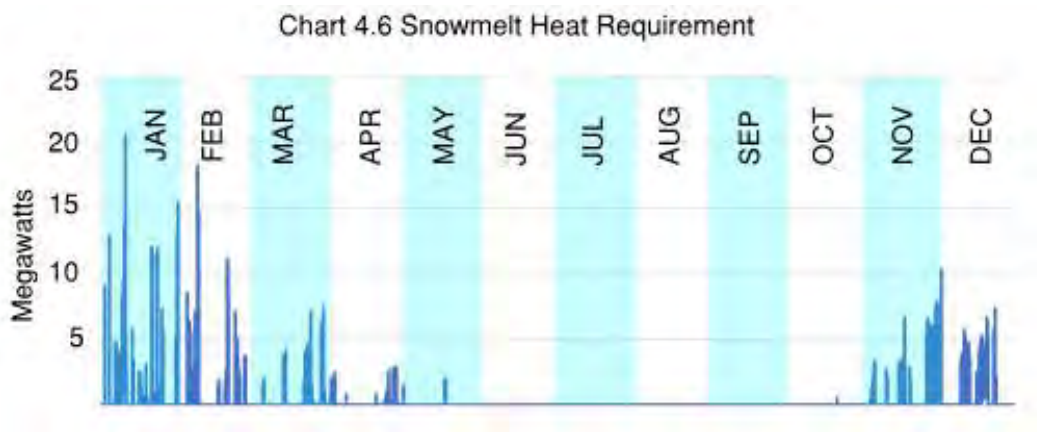

The peak power required exceeds 20 megawatts and snowmelt events occur in all months except June, July, and August. The total energy required for snowmelt is 2617 megawatt hours, larger than any other meter in the energy corridor and similar to the total energy used by the wastewater treatment plant. The existing electric snowmelt at the airport highway underpass used 639 megawatt hours for a much smaller area (estimated at 3,300 square feet, and with a peak load of only 250 kW. As can be seen in Chart 4.2 this system is operated via a simple control system that results in more continuous usage. The intelligent control of such a massive snowmelt system will be critical to limit energy consumption to only what is needed to melt snow. If the new snowmelt system is operated like the existing underpass snowmelt its energy consumption will dwarf the energy consumed by the rest of the facilities in the energy corridor.

5. MICROGRID SYSTEM IMPROVEMENTS

The microgrid system proposed would be a subdivision of the utility distribution system in the AABC district. The microgrid system would have definite boundaries, capable of operating within the regional grid, or operating as an islanded grid independent of the regional power grid. When operating within the regional grid the goals will be to utilize clean energy to the extent possible and store excess energy from renewables for peak power use times, or for grid outage conditions.

Existing Conditions:

Present tariff requirements:

Currently, the HCE Interconnection Policy allows for distributed generation (DG) in combination with energy storage systems (ESS) to operate in parallel with the Holy Cross System. The operating modes of the system must be disclosed and be part of the interconnect agreement. The ESS cannot discharge to the grid without established communications and proof of controls to Holy Cross's Dispatch Center. Holy Cross will be operating the system; however, these documents will assist in maintaining clear documentation for operations and for partners working with Holy Cross in the microgrid effort.

Storage Option Comparison:

The storage options considered here are centrally located ESS units, and distributed ESS units at the load sites located behind the meter. Two types of storage were investigated, Lithium-Ion batteries and Vanadium Flow batteries. The Lithium-Ion batteries presented features that better served the application during discussions and so were used for examples in this report. See Table below for comparison. The function of the energy storage system within the microgrid environment was reviewed. When coupled with a distributed renewable energy source, such as solar PV, and connected to the grid, the ESS allows for dispatching options that normally would not exist with the PV alone. A residential or commercial site that has a substantial PV asset, when compared to the site load, can store a percentage of the electricity generated for use when electrical prices are higher, or to distribute the power over a greater period to avoid the importing of grid power.

Table 5.1

Comparison of Lithium-Ion and Vanadium Flow Battery Types

Factor	Lithium-Ion	Vanadium Flow
Cost	Approximately $1,365/kW or $341/kWh	Approximately $945/kW or $256/kWh
Size of installation	The physical space is occupied by about 11 structures, 8 ft x 20 ft x 12 ft High, spread apart with space between structures	Trailer size structures are joined together on single foundation. Approximately 50 ft x 50 ft x 20 ft High.
Maintenance	The maintenance required for these batteries is sophisticated. They should not be drained too low, cycles are limited, they need replacing at about 15 years if cycled daily. Structures have climate control systems, that are critical.	Low maintenance, will need heat in very cold weather. Has a small circulation motor in the tanks. Life is 25+ years with unlimited cycling.
Fire hazard	Specially trained first responders for fire hazard, structures are spread apart to isolate events, insurance costs may be higher due to lithium ion track record	No chance of runaway heating, non-flammable liquids, environmentally safe materials
Fault current levels	Higher available fault current to allow circuit protections to operate and provide a more robust system	Capacity to meet demand (kW) is set in the system installed. This usually results in a lower available fault current. Capacity of energy to serve (kWh) can be extended by adding more fluids.
Availability	Readily available technology, greater widespread use.	Not a new technology but not as widespread in use. There are several manufacturers. Gaining insight from other installations may be limited.

At this point it should be noted that there are two functions the ESS will be designed to accomplish. The first is to enhance the output of the renewable energy generation to serve the intended load with this power and avoid sending excess power to the regional grid. The second function is to serve as an alternate power source in the case of a utility outage. These two functions must be balanced by priority and by the limitations in the ESS capacity. This will require setting a discharge limit in the ESS programming sequence so that energy is reserved for utility outage conditions. Any stored energy above this discharge limit can be dispatched to the load in the daily cycle.

When the power is dispatchable, it becomes more valuable because it can be used to supplement high demand, or it can be a source when other sources fail. The balance between dispatchable and reserved energy will change over time as priorities change, or as storage capacity grows. A microgrid system usually includes power generation, energy storage, and load, all within a defined electrical boundary. When the power generation and the ESS are sized properly the energy draw from the grid is balanced, steady, and responds to the value of energy. This could relieve a great deal of stress from the grid as more load falls within microgrid systems.

If the grid power being supplied to the microgrid fails the power generation and energy storage combine to replace the power source lost. In this case, when grid power is lost, more of the stored energy may be used to keep the site operational. It also helps to have emergency procedures to lower the load. This could be done

automatically if a signal is sent to the building control systems of the affected buildings. Other times decisions can be made depending on conditions at the time.

A wider area site, such as a series of commercial buildings, would use a central ESS in much the same way. The difference may include having less control over the load, having additional transformer losses, and creating additional levels of fault isolation to coordinate. The positive attribute that stands out with the central ESS is that it can be used as base power when the microgrid is in island mode. The ESS works best for this function since it's energy is more dispatchable than the other sources, and the component energy sources with inverters connected to the grid can remain compliant with IEEE 1547 and disconnect from the grid when there is no utility power. The ESS would have the specialized equipment and communications to sense the loss of grid power and operate without it.

There are several positive features in both options. The direction chosen for a utility microgrid, such as the Energy boundaries proposed, would utilize a central ESS. In this case, it is still possible, and recommended, to include distributed energy storage in combination with other PV arrays behind the meters in the Energy Box microgrid system. These additional battery units would stabilize the load draw and supplement the energy use. Making this a part of the network programming would allow for expansion options for capacity, and would work better to make renewable energy use more efficient.

Central Battery Capacity:

The constraints used in sizing energy storage capacity for the central battery option include the amount of renewable energy associated with the storage, the loads, and the timing for charge/discharge cycles. For the quantity of renewable energy generated we can use 5MW for this application. We will use the average loading for the base calculation. The cycle times have a significant impact on the kWh capacity sizing. For the minimum capacity, the storage will collect power not used locally during PV generation and expend that energy in the evening when bus charging and snow melting may be dominant loads.

Table 5.2
Application of Renewable Energy to Loads

Factor	Daily Average Output to Loads, kWh	
	Daylight hours	**Evening hours**
PV Input	9,000 Out of 27450	NA
Energy Storage System (6 MW, 4 hour)	Charge: 9,600 + Losses Remainder to Grid	9,600 Out of 240,000
Total	18,600	

Microgrid Analysis by Section:

Service Center Road:

The main facilities in this section include the Pitkin County Public Works (PCPW) and the Roaring Fork Transportation Authority (RFTA). Both are made up of structures in a campus style area, and both have additional renewable energy installations planned, both rooftop and carport mounted. Both installations could benefit from being paired with energy storage. This is especially true of the RFTA bus charging loads which occur after the PV output has peaked for the day. This is true also of heating loads as more of these are moved from natural gas to electrical source energy and typically go up as natural daytime solar gain goes down. Previous reports indicate additional PV installations in this section will add to approximately 400 kW, (Phase 2) and an associated ESS with 6 MW, 24 MWh capacity (Phase 1). See One Line Diagram in the Appendix for Phase electrical boundaries.

Brush Creek Park & Ride, and the 5MW PV Array:

The load profile of this section of the microgrid is different from the other sections, in that there is a low load under normal conditions. The 5MW PV output would feed into the grid, or be stored in the associated ESS. Some of the stored energy could be used during non-daylight hours for the Park & Ride loads. However, the Park & Ride may serve as a temporary base area in the event of weather or fire related emergencies. If the grid were down at that time, the site would depend on power from the 5MW PV array and the central ESS connected to this area of the microgrid.

Aspen/Pitkin County Airport

The airport has more PV generation planned for both the new terminal building and for additional shade structures north of the terminal. The intent is to make the airport a net zero site by generating power onsite and purchasing renewable energy credits, as necessary. A large amount of PV with associated ESS is planned to serve the airport. The airport loads are planned to be added to the AABC microgrid during Phase 2.

Network and Communications

Nodes and Information

The microgrid network will allow for the transfer of information between generators, ESS, loads, and switches. The network can facilitate historian servers to gather load and power generation trends to use for adjusting power dispatch levels, future expansion requirements or for maintenance tracking. The network would be used to monitor Energy Box loads, which would help schedule ESS charging and discharge rates. The most important function would be to initiate switching the microgrid components to island mode if the

regional grid goes down. This signal may originate from the ESS controller and would go to the distribution switches and loads to transfer to island mode operation. Satellite clocks in strategic locations to align the sequence with other functions, and to accurately time stamp events.

There are various levels of actuation that can occur for this condition. Dispatch could choose to manually control the transfer switching, or it could all be done automatically. Manual control could ease the addition of sections onto the PV and ESS sources, or the time could be used to verify the outage is a long enough condition to warrant the transition. Automatic controls could be set with delays to allow monitoring between transfers.

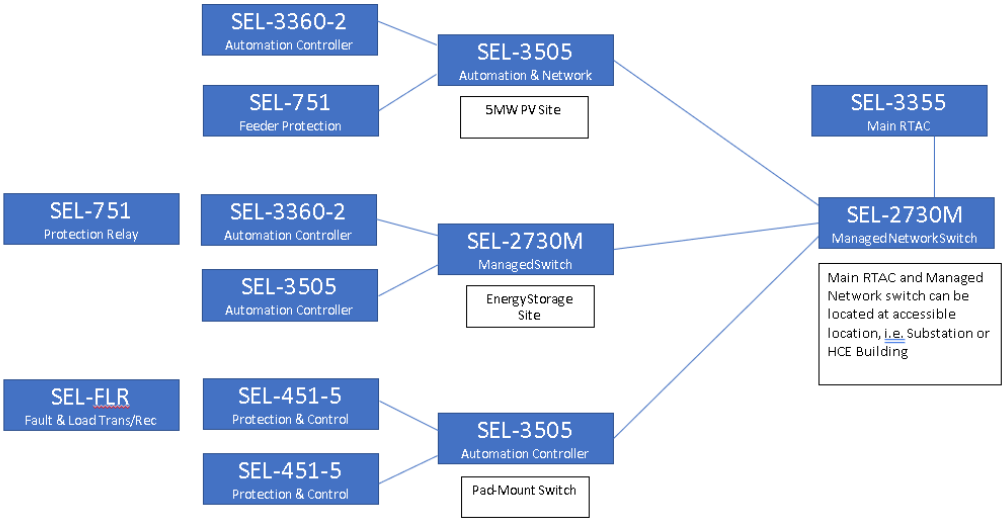

Figure 5.3: Energy Box Network & Control Conceptual Block Diagram

In the figure above, Schweitzer Engineering Laboratories relay components are indicated for the control of the microgrid network. The network centers around the SEL-3355, Main RTAC, which has the overall intelligence for the system. The RTAC is a center for the data collected by the other units and makes decisions based on sequences programmed into it. This unit would be at the HCE offices. Alternate RTACs for back up or to join related networks could be added and connected to the main RTAC. This RTAC is expected to be linked to the regional network in a way suitable to HCE to provide and receive status signals as to grid condition. The SEL-2730M is a managed network switch to join equipment at these locations, such as a PC. The switch is managed in anticipation of multiple inputs where it must be programmed with knowledge of which is prime input and which is alternate.

The network will connect nodes at remote locations. Nodes at renewable energy generation, ESS, and switching sites will receive an automation controller that will control components at that site. They will monitor conditions, such as diagnostic signals, enclosure door status, switch status, and communications status. These units are also capable of storing programming to act under certain conditions, such as tripping an upstream switch on a breaker fail signal.

Installation of Physical Components

Currently, most of the medium-voltage (MV) switching is manual. The plan would be to selectively add or replace certain existing MV switches with motorized switching to allow for remote operation. The new switches would also be fitted with auxiliary contacts and/or voltage sensing to verify switch status. The new switch specification would be in line with the G&W Trident-SR Solid Dielectric set up for automated operation. The switch enclosures would contain the protection and automation relays necessary to control the switches and monitor the microgrid at and around that point.

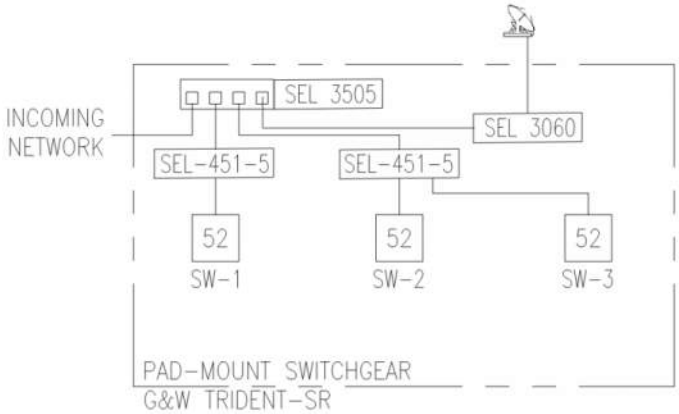

Figure 5.4 Typical Pad-Mount MV Switch with Automation Relays

The main intelligence in the system would be located at the HCE offices. Redundant controllers can be located at the central ESS. The building services that are part of the microgrid have options for diverse levels of intelligence. They could have none, although it is suggested that they be able to receive a signal when the microgrid is islanded. The signal could be used to lower loads temporarily to help stretch the stored energy levels.

The network media between nodes could be one of several options. The ideal solution is to route dedicated fiber optic cable to each location. This could be combined with a community solution under the Colorado Department of Local Affairs (DOLA) broadband grant program. This program, designed to make broadband more available to communities, could assist with "middle mile" fiber optic infrastructure, which includes planning and broadband installations, except the connection costs of the end use equipment, or "last-mile". Other economical solutions are available, such as obtaining a leased line from the local telecommunications company, or setting up a radio frequency pathway. These network pathways should be always supervised with diagnostic signals sent and received by each. The pathways could also have a level of redundancy, such as a loop configuration. Network security is a factor that would be designed into the system, both physical security and data security. Technology has advanced enough such that there are several solutions available for each of these aspects.

Protection of the System

Electrical protection of the system could remain the same when connected to the regional grid. When connected to the regional grid the available fault current will remain as it is now. The additional local PV generation adds little fault current, and the ESS should be tightly protected in this mode of operation. However, when in island mode, depending on ESS technology installed, the available fault current may be reduced. And rapid discharge of battery systems should be avoided.

The feeders related to the microgrid loads when in island mode are recommended to be protected with the electronic relays. The feeders out of the intelligent switches would be protected this way, and it is possible to improve protection by monitoring the taps off the feeder to a certain distance (approximately 0.25 mile) from the parent relay using the SEL-FLT & FLR fault indication system.

6. DISTRICT ENERGY OPTIONS AND ANALYSIS

District energy systems have the potential to bring together energy sources and users, reduce peak demands and assist in the use and distribution of renewable energy. There are many examples within the state of Colorado of district energy systems but most are on business or educational campuses, only a few are run by utilities. In order for a utility system to succeed it must offer a significant advantage to potential customers and still provide revenue to offset utility costs. This section of the report explores the possible options for the buildings in the energy corridor as well as their advantages and difficulties. Only systems using electrical source energy are considered so that the systems have no carbon emissions.

Although district energy systems can include both heating and cooling systems this report focuses on heating. This is because the vast majority of the energy needed by these buildings is for heating vs cooling and because all of the cooling systems in the buildings already use electrical source energy that can be supplied from renewable sources.

District Energy Options:

Typical district heating systems use a fossil fuel fired boiler and distribute either steam or water to remote buildings. Electric boilers can be used instead of fossil fuel boilers (such as those recently installed in Vancouver B.C.'s downtown steam system) but in most locations electrical energy is far more expensive than natural gas or coal. A more promising system from an energy use and ongoing cost perspective is a heat pump system, typically using a geo-exchange field or body of water as a heat source. These systems can be applied to individual buildings or district systems. A recent example of a district system is Colorado State University's Moby Geo-exchange project which is currently under construction. Figure 5.1 shows a schematic of the system

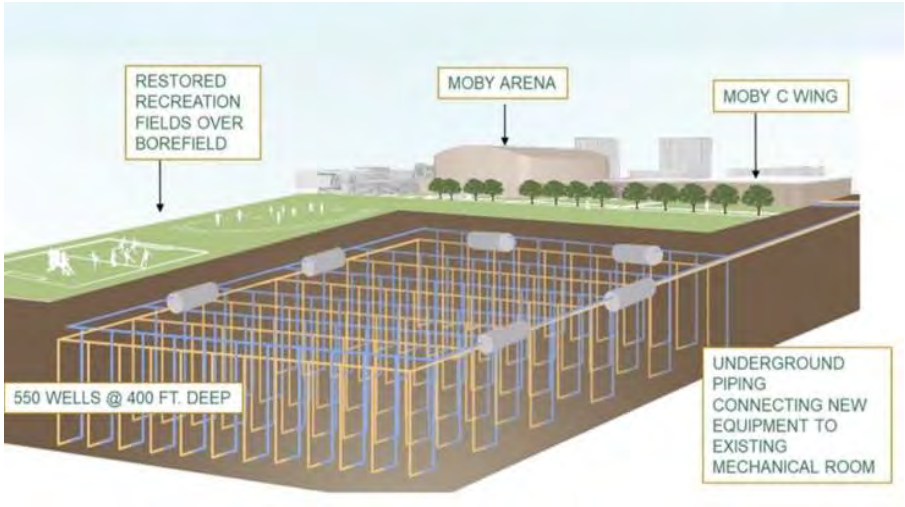

Figure 6.1 – Schematic of CSU Geo-X project – Source : CSU

District energy systems will often include thermal storage to shift or smooth peak demand. Thermal storage systems have typically stored chilled water or ice for cooling purposes but are equally capable of storing hot water or heat in phase change materials. For this system thermal storage may be a valuable tool to limit peak electrical usage for highly variable loads such as the snowmelt system.

For the purposes of analyzing different district systems, a system consisting of central electric boilers with hot water distribution was used as a baseline. The baseline cooling system would be a central water cooled chiller although in reality all cooling systems would likely remain distributed, not part of a district system. The ability of a district system to provide a tangible benefit to customers is small due to the relatively small number of cooling hours, and the small difference in peak power and energy consumption between a district system and the existing distributed cooling systems. The sections below provide more detailed information on each type of district system considered. Note that for all systems the equipment listed includes redundant heating equipment so that if one piece of equipment is down for maintenance the system output is still capable of meeting peak loads.

District System #1 – Electric Boilers (Baseline)

This basic system would eliminate the gas and oil fired heating equipment in all buildings and instead supply heating water from a central boiler system. That system would likely be on leased customer property but constructed and maintained by the utility. A schematic of this system is shown below (larger schematics are available in the appendix).

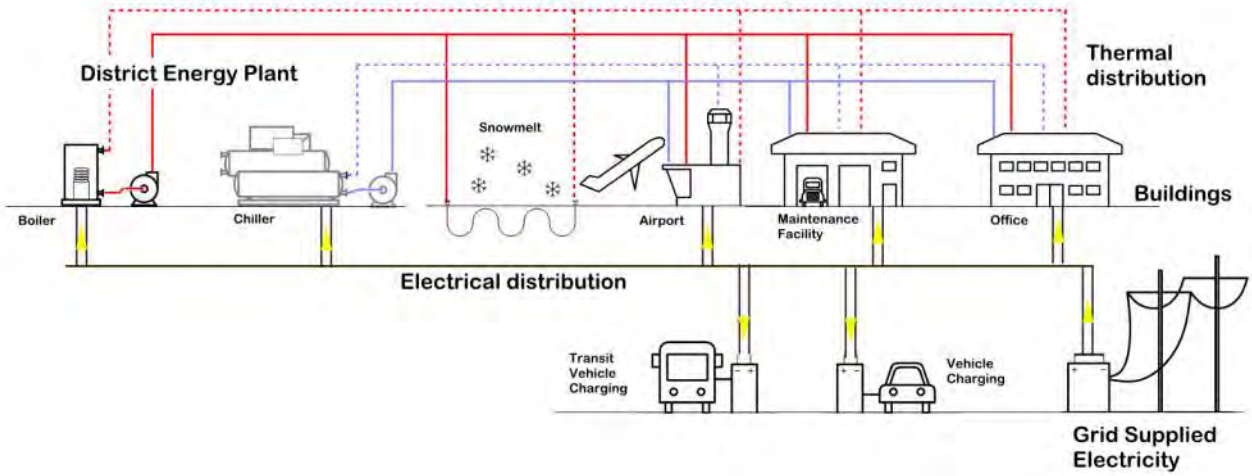

Figure 6.2 – Conceptual schematic of a basic district energy system

Insulated supply and return piping would be routed from the central plant to each building served by the district energy system. The piping would typically be buried to pass beneath roads, walkways, parking and landscape. Chart 5.3 shows example equipment and key metrics for this system.

Table 6.3 District System #1 Performance

Peak Demand (MW)	Electricity Consumed (MWh)	Storage Size (gallons)	Major Equipment
1.7	2,915	0	7x Cleaver Brooks WB422 Boilers, 3360 kW and 4047 amps at 460 volts. 5x circulating and distribution pumps at 1250 gpm and 60 HP

District System #1a – Electric Boilers with storage

This system would consist of the same components as system 1 but would allow for a smaller boiler size and peak power requirement by using a storage tank to accumulate thermal energy to be distributed to district loads, especially the snowmelt load, on demand. The storage size and the required boiler size are related. The larger the storage tank the smaller the boilers can be. It should also be noted that the thermal storage system would also allow for grid flexibility. Thermal energy could be discharged from the storage tank instead of operating boilers, significantly reducing load for a period of time. The boilers would then recharge the tank at times when demand was lower or renewable energy sources were plentiful. The system uses slightly more energy than system #1 because of losses from the thermal storage tank.

Table 6.4 District System #1a Performance

Peak Demand (MW)	Electricity Consumed (MWh)	Storage Size (gallons)	Major Equipment
4.8	3,275	1,000,000	4x Cleaver Brooks WB422 Boilers, 3000 kW and 3613 amps at 460 volts. 5x circulating and distribution pumps at 1250 gpm and 60 HP

District System #1b – Electric Boilers with molten salt storage

This system differs from system 1a in that it uses molten salt as the storage medium instead of water. Because the salt is stable over a wide band of temperatures the storage size can be greatly reduced. On the other hand the operating temperature band is quite high, and starts at 300-500 °F depending on the specific salt used. The typical use of molten salt storage is to store thermal energy from concentrating solar thermal power plants where it is paired with a steam turbine to generate electricity. It is a mature technology but the salts must be kept above their melting point and can be corrosive at high temperatures.

One interesting possibility with this system is to include a steam turbine to extract electrical power from the stored heat. The heat rejected from the steam condenser downstream of the turbine can still be used for heating so no energy is lost by generating electricity first. Importantly no energy is gained either, in order to get one unit of electrical energy and five units of thermal energy out, an input of six units of electrical energy (via the salt heaters) is required. Table 5.5 shows this system's performance:

Table 6.5 District System #1b Performance

Peak Demand (MW)	Electricity Consumed (MWh)	Storage Size (gallons)	Major Equipment
7.5	3,444	150,000	3x 3,750 kW salt heaters, 3x 7,500 kW salt to water heat exchangers, 1x 9100 kW salt to steam heat exchanger, 1x 500 kW steam turbine, 1x 8600 kW condenser/HW heat exchanger, Distribution and feedwater pumps

District System #2 – Ground source heat pump with storage

This system consists of heat pumps capable of providing the heat required for facilities in the energy corridor, a geo-exchange bore field to draw heat from the earth, and a storage tank. A schematic for this system is shown in figure 5.6 below. Note that the tank does not store heating water, it stores source water for the heat pumps.

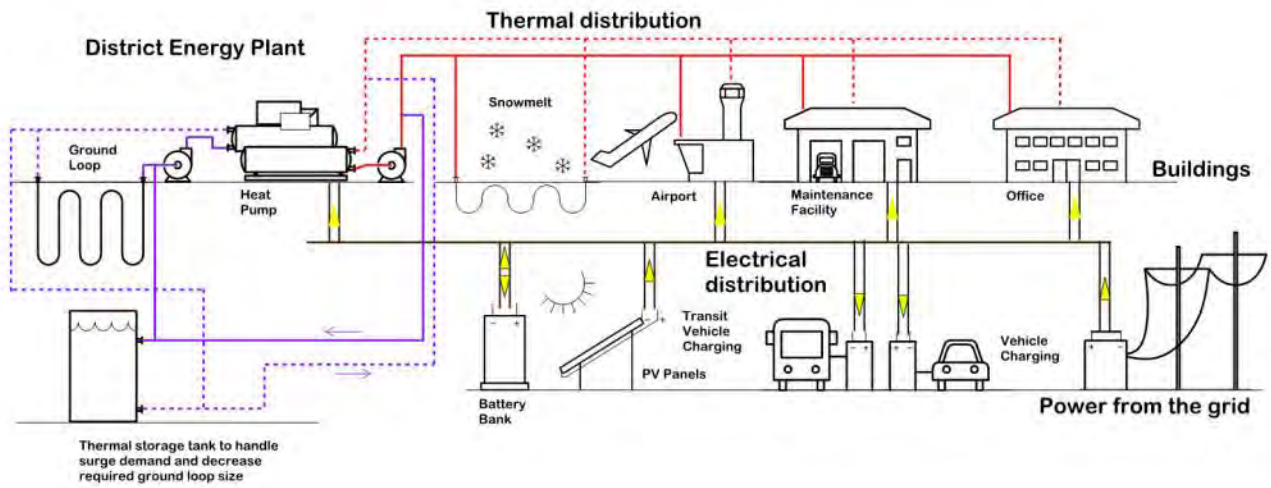

Figure 6.6 – Ground Source Heat Pump District Energy System

Although it would be possible to construct this system without a storage tank the bore field would then have to be sized for the peak load, resulting in a large portion of the bore field that is used for only a few hours a year. The storage tank allows a much smaller bore field to meet the needs of the energy corridor. This arrangement does put heavier use on the bore field wells that are installed. A more detailed analysis of the geology at potential bore field sites would be required to determine a final field size and configuration. It may be necessary to increase the field size somewhat and cycle wells to let them "recover" so that the ground temperatures around the wells do not get too cold.

The table below shows the performance of this district system. Note the much lower energy consumption for this system since the electrical energy is used to draw heat from the ground at a coefficient of performance (COP) greater than 3 vs electric boilers with a COP of 1. The size of the geo-exchange bore field and the size of storage required are related. Increasing the geo-exchange field will allow for smaller storage and visa versa.

Table 6.7 District System #2 Performance

Peak Demand (MW)	Geo-Exchange Loop Size (MW)	Electricity Consumed (MWh)	Storage Size (gallons)	Major Equipment
0.8	2.15	892	820,000	3x York CYK central heat pumps at 11,000 kW heat output each, 5x circulating and distribution pumps at 1250 gpm and 60 HP, 5x evaporator side pumps at 1250 gpm and 50 HP

District System #2a, 2b,and 2c – Ground source heat pump variations

Several augmentations to the geo-exchange heat pump system were modeled to either decrease the geo-exchange field size, decrease the thermal storage size, or to capture additional renewable energy. The performance of these systems is shown in table 5.X below. System #2c might be of interest if the cost of area required for the geo-exchange field needs to be balanced against the better performance of system #2.

2a: System 2 with the addition of 5.27 kW (50,000 SF) of thermal solar capacity. This extra energy allows this system to consume less electricity overall than system #2

2b: Instead of using a bore field this option uses a large ice storage system as a thermal source. The district is heated by drawing heat from water in the storage tanks until it becomes ice. The ice is then melted by the solar

thermal energy collected in a 5.27 kW (50,000 SF) array or by an electric backup boiler. In this climate that storage had to be large to maintain the system through cold, low sunlight periods.
2c: System 2 with a 2000 kW electrical boiler to supplement a smaller geo-exchange field. In order to provide grid flexibility for this option a segmented tank would be used so that higher temperature water could be stored and used to mitigate peak heating demands.

Table 6.8 District System #2 Performance

	Peak Demand (MW)	Geo-Exchange Loop Size (MW)	Electricity Consumed (MWh)	Storage Size (gallons)	Major Equipment
Option 2A	1.2	3.00	671	560,000	Same as System #2 + 50,000 sf of solar thermal collectors
Option 2B	1.5	0.00	921	1,560,000	Same as System #2A, except storage no geo-exchange field, storage is an ice storage system and 2x 1000 kW electric Boilers are included
Option 2C	0.5	1.25	1,223	550,000	Same as system #2 + 2x 2,000 kW electric boilers note the smaller geo-exchange loop

District System #3 – Hydrogen fuel cell and electric boiler and storage

The energy performance of the energy corridor with the addition of the 5 MW solar farm near the Brush Creek park and ride is such that there is significant oversupply of electrical power during late spring, summer and early fall while the energy corridor consumes more power than the solar farm generates during the winter. In order to balance these energy flows the oversupply could be converted to hydrogen, stored, and then used to create both electrical power and heat through a fuel cell or reciprocating engine during the winter. There are also significant losses in generating and compressing hydrogen which are accounted for in the performance shown below. The performance for both a fuel cell, which would be operated at constant output from October through April, and an engine which would be operated at variable output during the same period. See the appendix for schematics for these systems.

Table 6.9 District System #3 Performance

	Peak Demand (MW)	Fuel Cell or Engine Size (MW)	Electricity Consumed (MWh)	Storage Size (gallons)	Major Equipment
Option 3A	1.4	0.2	4,954	1,020,000	One 200 kW fuel cell, two 2500 kW electric boilers, 4,000 kW electrolyzer, 3000 MWH hydrogen storage

Option 3B	4.9	1.95	6,686	1,020,000	3x 650 kW hydrogen engines with heat recovery, 2x 2000 kW electric boilers, 800 kW geo-exchange system, 4500 kW electrolyzer, 3750 MWH hydrogen Storage

These systems reduce peak demand but use even more energy than the baseline electric resistance boiler. Apart from the system performance there are other considerations that must be made before implementation and construction. Although all the technology needed to construct and operate this system is well established there are still challenges with handling and storing hydrogen in a non-industrial setting. The storage capacity needed for seasonal storage of hydrogen may be impractical. Hydrogen is much less energy dense than natural gas or liquid fuels, which requires a significant pressurized storage volume.

District System #4 – Air source heat pump with electric boiler and thermal storage

Heat pump systems need a source of heat to draw upon. While a ground source or geo-exchange system is more efficient drawing it's heat from the relatively warm earth the cost and complications of a bore field are substantial. A heat pump can also draw heat from air as cold as -4°F or even lower with some cold climate systems. At low temperatures the fundamental challenge is heat pump lift, the temperature difference between the very cold air and the warm temperature needed to provide heating. Efficiencies decrease with COPs falling below 1.5 and capacity drops due to both the lower efficiency and the necessity of de-icing cycles on the outdoor coils. It is possible to design a system where the air source heat pump contributes when temperatures are above -4°F and an electric boiler and thermal storage carry the energy corridor's heating needs during colder periods and snowmelt peaks. The performance for such a system is shown below.

Table 6.10 District System #4 Performance

Peak Demand (MW)	Electricity Consumed (MWh)	Storage Size (gallons)	Major Equipment
5.9	1,949	1,500,000	11x 500 MBH air to water heat pumps, 3x 2000 kW electric boilers, 5x circulating and distribution pumps at 1250 gpm and 60 HP

Other Considerations for District Energy Systems:

Apart from the systems described in the options above there are other district energy options that deserve some consideration within this report. The following sections describe those options and why they were not modeled or considered for this analysis.

Other Potential District Energy Options

Biomass Boilers:

It is understood that no system burning fossil fuels would meet the goals of the energy corridor and so natural gas boilers were not considered. Biomass boilers could be considered as the carbon dioxide emitted from these boilers would be part of a cycle, and could be considered to be re-absorbed from the atmosphere as fuel is grown. Wood from forest thinning or other forestry projects is one option for this as is bio-gas from the wastewater treatment plant.

Although Boulder County has run biomass boilers fired on wood chips and forestry waste for several years the fuel handling challenges are significant and further study on fuel availability and handling capabilities would be necessary to explore the feasibility of wood fuel for the energy corridor. Based on comparisons to larger wastewater treatment plants the Aspen Consolidated Sanitation District's plant might produce enough biogas to provide as much as 150 kW of usable heat. The digesters where the gas is produced require some heat input but 75-100 kW might still be available for the district if the gas could be harvested and burned in a heating system. More information about the wastewater treatment process and the specific constitution of the biogas produced at the facility (if any) would need to be reviewed to determine the feasibility of capturing this energy source.

Heat recovery from sewage or treated wastewater:

Another potential energy source from the wastewater treatment plant is the heat contained in the wastewater itself, either before being treated or from the effluent (treated water leaving the plant). The plant averages approximately 1.4 Million gallons per day of influent. If the effluent is of a similar volume and were to be cooled by 3°F the process could deliver as much as 550 kW of heat using only 125 kW of electricity (plus pumping energy). This represents roughly 50% of the heating energy required for the energy corridor including the airport snowmelt. In addition, cooling the effluent may be beneficial to the wastewater treatment plant as many facilities are required to reduce their effluent temperature to prevent raising the temperature of the river into which they are discharging. Given the large amount of heat potentially available and the proximity of the wastewater treatment plant this potential heat source should be pursued. The performance of such a system would be similar to the ground source heat pump systems with the heat recovered from the effluent taking the place of much of the geo-exchange bore field.

Distributed heat pumps

Another variation of the ground source heat pumps systems described in option #2 would be to distribute the geo-exchange water to each building where individual heat pumps would be used to provide heating or cooling to each building. This system has several advantages in that the distribution piping need not be insulated, any simultaneous heating and cooling that occurs in different buildings can be accommodated, and each building would have more control over supply water temperature for its own use. This system would decentralize the equipment described in option #2 which would increase the control difficulty for the utility. However thermal storage, perhaps under the control of the utility for dispatch and grid stability, would still be possible. As would contributions from the waste water treatment plant.

This systems performance will be similar to system #2 and so it was not modeled separately. Should a district system enter a design phase this system should be evaluated against system #2 for cost, complexity, controllability. A diagram of this system shown below with a larger version included in the appendix as District Energy System #2x.

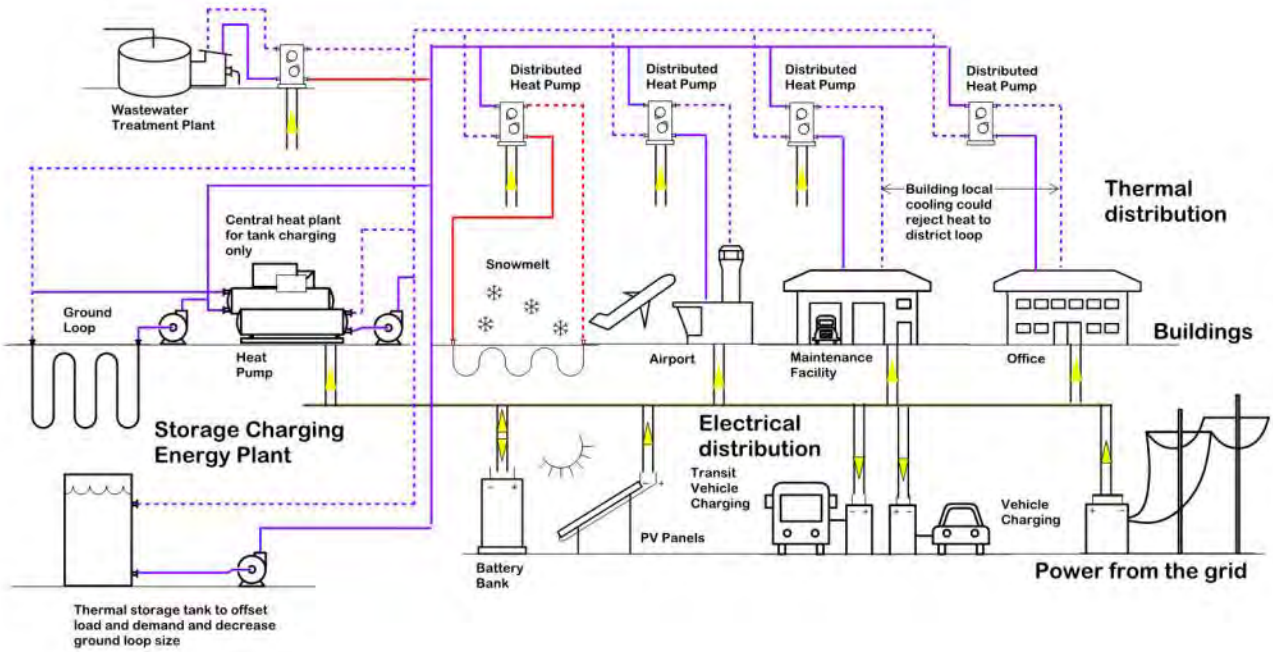

Figure 6.11 – Distributed heat pumps system diagram

A system that has been proposed as a alternative to the central plant and distribution model of district energy systems is to have a ambient temperature loop from which distributed heat pumps draw or deposit heat. This system would look different from system #2 in that each building would have a heat pump and the central heat pump that would only charge the storage tank used to limit the total ground loop size. The advantages or this arrangement would be: The ability to both heat and cool from the loop at the same time, and reduced cost and heat loss in the distribution system as the piping could be buried without insulation as the distributed water would be close to ground temperature. The disadvantage would be additional equipment as a heat pump would be required at each building and the sum of the capacities of these heat pumps would be greater than what was needed from a central system.

District Systems types that were not considered to be feasible

Option #4 included an air source heat pump with electric boiler backup. This was necessary because air source heat pumps lose capacity, efficiency, and can even fail to provide any heat at all at temperatures between -4°F and -20°F depending on the specific equipment. The record low for Aspen is -37°F and in a typical meteorological year the low temperature would be -22°F. This makes an all air source system, even something like a VRF system infeasible.

Geothermal systems were discussed and there is significant geothermal heat in the region, most notably in Glenwood Springs. These systems differ from geo-exchange systems in terms of ground temperature. In a geothermal system the source temperature ground is hot enough to provide heating water directly, without the heat pump of geo-exchange systems. However there is little evidence of warm enough geothermal heat locally that could supply the energy corridor. A survey of resource maps including the geothermal prospector tool hosted by NREL indicated low potential in the immediate vicinity of the energy corridor.

The Leading District Energy option:

In considering which district system is best suited for the energy corridor we must consider both performance and the likely costs of the system. First let us review the performance of all the options with three key metrics.

- System peak demand – the lower the better
- System annual energy use – the lower the better
- Can the system offer grid flexibility? Yes or no?

The chart below shows peak demand and indicates grid flexibility by color. Systems with the ability to dispatch energy to limit electrical demand are shown in blue, those that cannot are shown in red.

A short description of each system is provided here for reference, see the sections above for more detail.

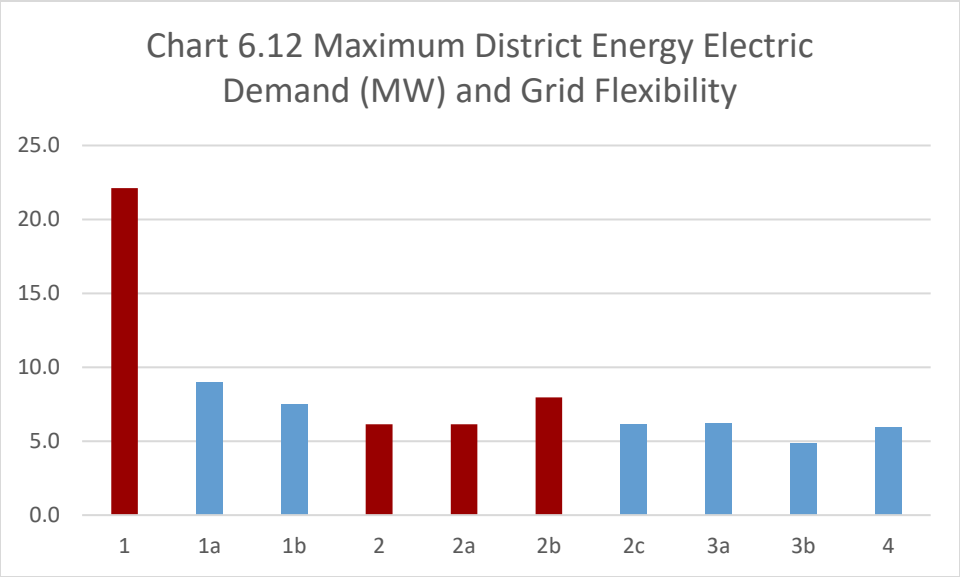

1 = electric boilers
1a = electric boilers with storage
1b = 1a with salt storage
2 = GSHP and thermal storage
2a = 2 with solar thermal
2b = 2 with smaller geo-exchange
2c = 2 with electric boilers
3a = hydrogen fuel cell
3b = hydrogen engine
4 = ASHP with electric boilers

The other metric, annual energy consumption is compared chart 6.13. In this case systems shown in blue are those that have low enough consumption to make the corridor a net exporter of electricity vs a net importer.

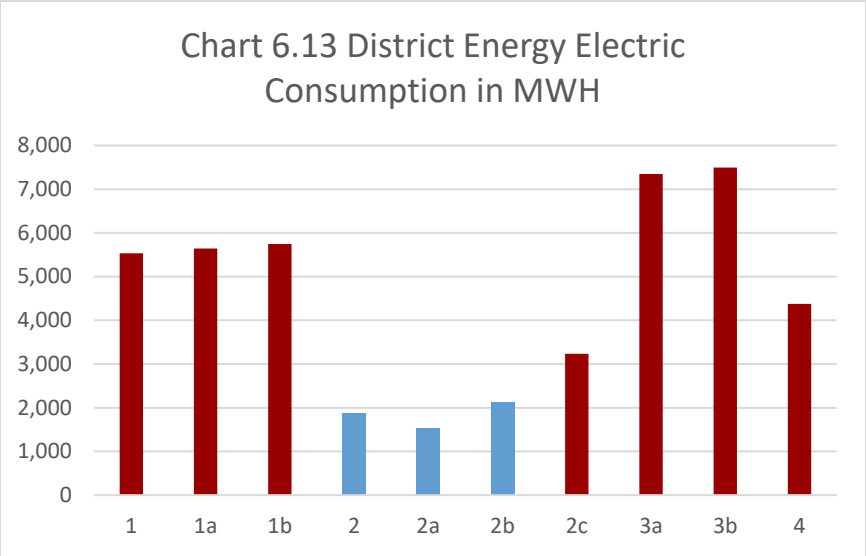

These results shown the impact of the ground source heat pump systems superior efficiency. Only those systems keep the total electrical consumption of the energy corridor below the electrical generation of the photovoltaic arrays. Note that just because the corridor could produce more energy than it consumed annual does not mean that it would not need to import power from the larger transmission grid at times. See the microgrid analysis for more detailed information on the flow of electrical energy into and out of the energy corridor.

It is fairly clear from these results that ground source heat pumps (GSHP) are the best performers and that thermal storage is an effective solution to limit bore field size. Grid flexibility can be added to these systems by adding electric boilers but there is an energy consumption penalty for doing so. Next let us examine costs. While this report does not estimate costs we can make some useful generalizations. Electric boiler systems are less expensive unless transmission or substation upgrades are required to operate them. Geo-exchange loops are moderately expensive and so limiting their size helps control costs. Solar thermal energy systems are relatively expensive, although the cost decreases with increasing system size. Thermal storage tanks are less expensive per unit of storage the larger they get.

Given these considerations we would consider district option #2 to be the leading system with the potential to incorporate the boilers from system #2c for grid flexibility and resiliency. Because the largest load in the system is the airport snowmelt we have shown the elements of this district system situation on the airports property but these elements could be located elsewhere in the energy corridor. Note that the size of the geo-exchange bore field is highly dependent on sub-surface conditions which would need to be investigated by test bores in the location selected for the field. Note also that if heat recovery from the wastewater treatment plant effluent was feasible the size of the geo-exchange field could be reduced significantly.

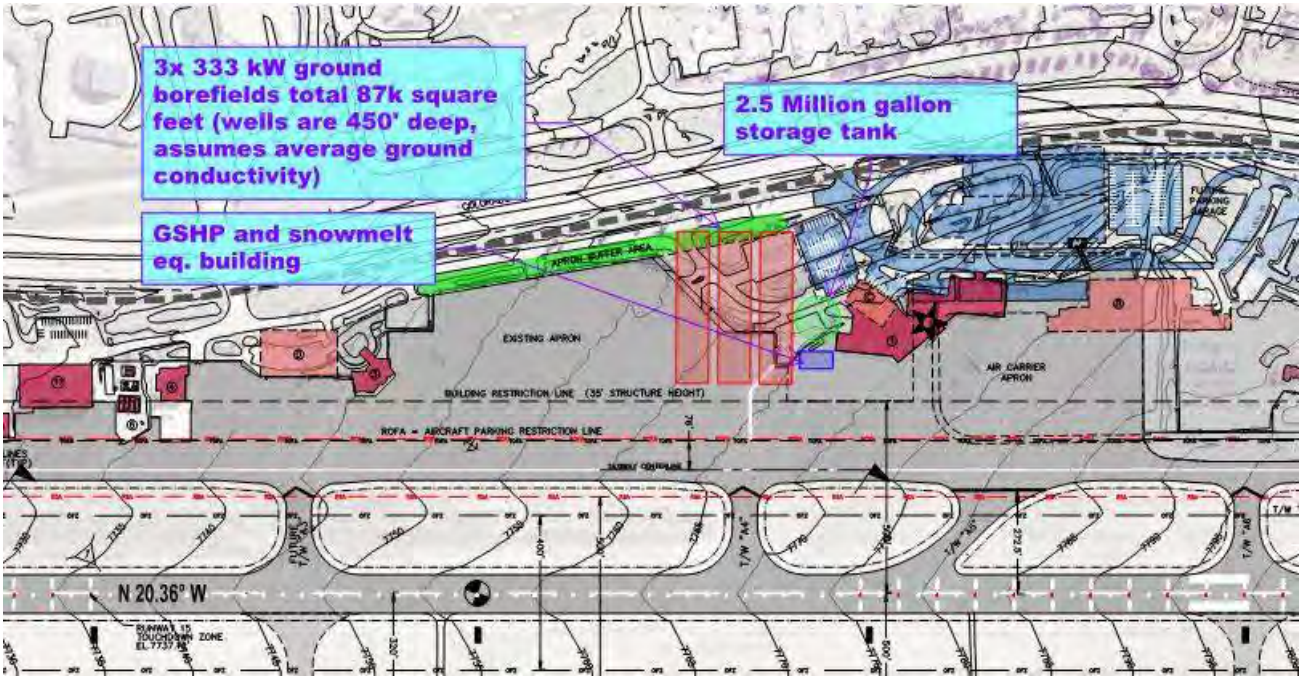

Figure 6.14 Potential Equipment Layout at the Airport – See appendix for larger version

The Case for a Utility Operated District Energy System:

The analysis of different systems above allows us to consider what the potential advantages of a district energy system are for the energy corridor and if those advantages are strong enough to justify the expense of the system. The district system would bring the following advantages and challenges

Advantages:

- Limit electrical demand for the airport snowmelt system to a power level that can be served by the existing electrical infrastructure
- Economy of scale: by aggregating all the energy corridor loads and installing a single geo-exchange bore field and storage tank the costs of these central systems will be lower than the sum of the costs of smaller copies of these systems at each building
- Efficiency: Larger more efficient heat pumps systems can be used, and an efficient district system would discourage small electric boilers that might be more tempting to each facility without the district option.
- Grid flexibility: With a large thermal storage system under utility control the amount of power required for heating could be controlled, over short time periods, to the advantage of the larger utility system.
- Ability to bring heat sources and heat demands together across separately owned facilities.

Disadvantages:

- Costs of the interconnecting piping between widely spaced buildings, which must be buried beneath roadways, including Highway 82.
- Perception maintenance and operations costs: Many district systems are hampered by the comparison of the costs of utility rates vs the costs of district energy delivery. Utility rates are usually cheaper because the costs of maintenance and equipment replacement are carried in the district energy rates. Although these are costs the facility would have to bare in either case the perception of the district system being expensive can hamper adoption.

- Property issues and utility easements that may be required for the district system

Conclusion and recommendations:

A district energy system for the buildings in this energy corridor would provide significant advantages but also require significant capitol expenditure. Our opinion is that Holy Cross Energy should consider two strategies and pursue information from the airport and waste water treatment plant to make a final choice.

Strategy #1 – Limit airport snowmelt electrical demand through an efficient heating system and thermal storage. Either as part of the airport's own system or as a utility operated system, provide the capacity to meet the airport snowmelt load through ground source heat pumps with electric boiler backup and a 1-2 million gallon thermal storage tank all located on airport property. This strategy would avoid substation or transmission upgrades coming in to the energy corridor and, if operated by the utility, provide grid flexibility. However if the airport snowmelt area was reduced the motivation for this strategy would decrease.

Strategy #2 – If heat recovery from the wastewater treatment plant is feasible a district system becomes a more attractive option. In that case a conceptual design for a system connecting the wastewater treatment plant to the airport with connections to RFTA and Pitkin County should be developed so that an estimate of the construction costs for district energy can be completed. If those costs compare favorably to the costs and rates of the upgrades listed in the planned improvement sections further steps towards realizing a district system could be taken.

7. MICROGRID PERFORMANCE

The performance of the microgrid can be quantified in two ways. First in the value of sharing resources, dispatching battery storage, and managing loads during normal, grid tied, operations and it's ability to island and sustain loads during an outage or disruption. This report does not attempt to quantify the performance during normal operations. The value of the microgrid depends on too many factors that are outside the purview of this report. However this report can estimate the resiliency value of the microgrid during an outage.

Resiliency Analysis

One of the expectations with a microgrid is that it can be self-sustaining through a disruption to the larger grid. The elements for resilient operation are in place, a source of energy (the solar array), energy storage (batteries), and independent controls. In practice this microgrid, without dispatchable generation, is harder to rely on for two reasons. First,the generation does not always match up with demand, an outage during the day may be bridged with the power generated from the solar array but an outage over night would not. And the second is that the battery storage would simply be sitting at full charge waiting for an outage. In order to be economically useful the batteries would be used to mitigate peak demands and could be mostly discharged when an outage begins.

In order to quantify the degree to which the microgrid can be used to sustain the local load through a disruption or outage on the broader grid the same analysis tools that were used for the district energy analysis were brought to bear. The hourly dispatch model predicts the percentage of hours an outage could start in where the microgrid could be self-sustaining for either four hours, or four days. The following assumptions are included in this analysis:

- The major snowmelt systems within the microgrid are not in use during the outage
- Grid charging is used to bring the batteries back to 95% charge each night
- The batteries are dispatched for economic gain each day, discharged down to 40% of full charge.
- The batteries can be discharged to 10% of full charge in an outage.
- The maximum demand does not exceed the maximum discharge capacity of the battery
- The backup generators at the airport, the Pitkin County building, and water treatment plant are energized during the four day outages
- Other factors as listed in the table including the size of the battery, if the backup generators are energized during the four hour outage, and which district energy system is modeled to serve heating loads Beneficial dispatch from thermal storage systems is not included.

Chart 6.1 shows the performance in different length outages with different heating systems. Figures 6.2 and 6.3 below are intended to give insight into the factors at play and the different portions of the year where the microgrid can sustain an outage. The graphs are in hourly resolution starting in January on the left with summer in the middle of the chart and December on the right. Because of the increased solar generation and decreased overall load summer outages are more likely to be sustained than winter outages.

Chart 6.1 - Microgrid Performance

Outage Duration	Battery Size	Generators for 4 hour outage	DE #1	DE #2	DE #4
4 Hour	2 MWH	No	43%	47%	45%
4 Hour	6 MWH	No	54%	60%	58%
4 Hour	12 MWH	No	78%	87%	85%
4 Hour	2 MWH	Yes	68%	80%	77%
4 Hour	6 MWH	Yes	83%	94%	91%
4 Hour	12 MWH	Yes	95%	99.7%	98%
4 Day	2 MWH	Yes	60%	77%	70%
4 Day	6 MWH	Yes	70%	89%	81%
4 Day	12 MWH	Yes	75%	93%	85%

Figure 6.2 Microgrid Performance Example - 6 MWH battery, DE option #1

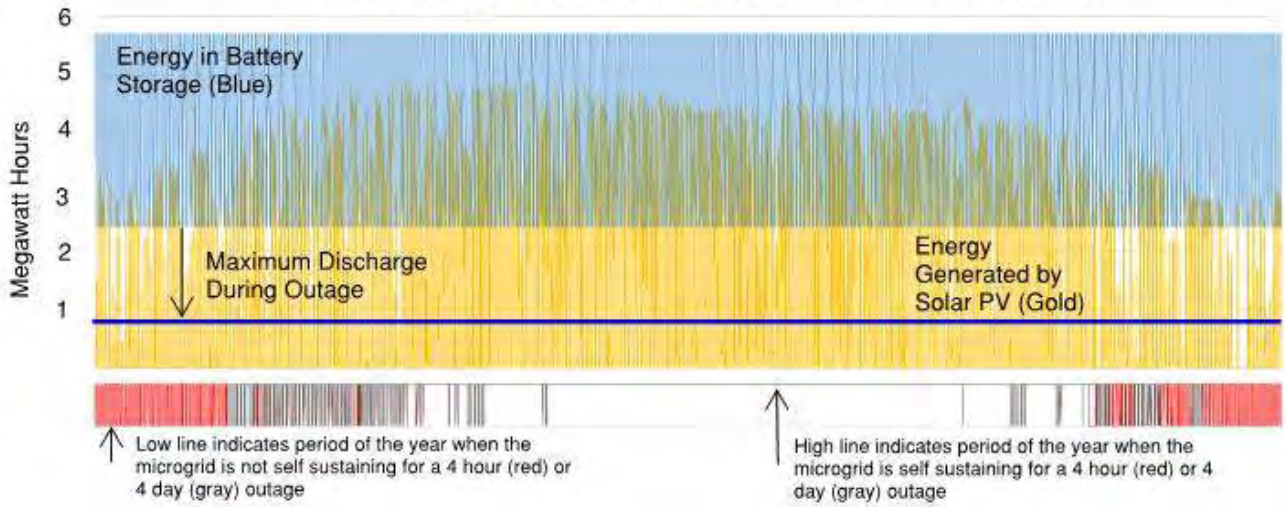

Figure 6.3 Comparison of stored energy required based on heating system (DE #1 or DE #2)

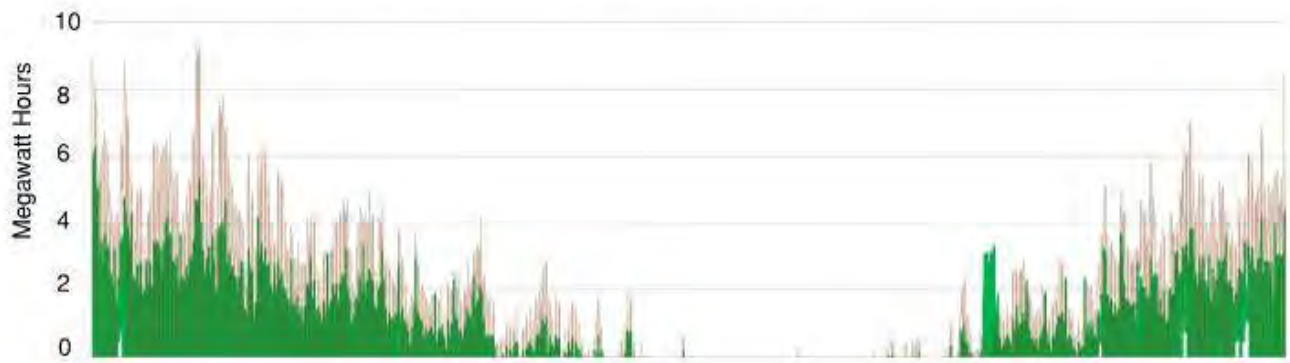

8. SUMMARY AND RECOMMENDATIONS

Microgrid Summary and Recommendations:
The ability of the microgrid to island and serve all loads through an outage is dependent on battery size, the type of heating systems used, and the ability to run and dispatch power from backup/emergency generators. RMH recommends that HCE clearly communicate with customers included in the microgrid about the abilities of the microgrid to carry the building loads. Especially as building heating systems that are electrified. Depending on the size of battery that is installed and the allowable depth of discharge it will likely become important to look for load shedding opportunities to maintain critical operations. If a district energy system is constructed look for opportunities to use thermal storage to increase electrical resiliency by using thermal storage to displace electrical loads.

RMH recommends the following steps to further the Microgrid design:

• Develop detailed drawings of the area and a detailed oneline diagram. The drawings would include full descriptions of installed components, switches, cables, etc.

• Develop network design drawings investigating feasible network paths, connections, and components .

• Develop network sequences to describe microgrid actions under certain grid events.

• Develop a preliminary interconnection document detailing maintenance, responsibilities, required actions and communications.

District Energy Summary and Recommendations:
There is potential for a district energy system to provide benefits to both customers and HCE, and to eliminate greenhouse gas emissions from the building heating systems in the energy corridor. A thermal storage system appears to be a good solution for the airport snowmelt system as serving it directly with electric boilers might cause a demand of 22 MW or more. Adding thermal storage to a district energy system could provide grid flexibility and increase microgrid resiliency. Ground source heat pumps with our without electric backup boilers appear to be the best performing systems.
Working against the implementation of a district energy system is very low building density and there large distances between buildings and potential heat sources. In between the larger buildings are steep grades, a highway and a runway, all of which make connecting the buildings to a district system more expensive. In addition many of the buildings have heating systems that would be hard to serve with district energy. For instance radiant heaters in vehicle bays are difficult to serve with hot water from a district system are likely to be come electric resistance rather heaters even if a district system was available.
RMH recommends three items as next steps:

- Work with the airport design team and snowmelt system design to mitigate peak electrical demand from snowmelt load
- Investigate the potential heat or energy recovery from the wastewater treatment plant
- Investigate the economic viability of a heat pumps system based on a geo-exchange system and/or wastewater heat recovery.

9. DRAWINGS AND APPENDICES

9.1 - Microgrid One line Diagram (1 page)
9.2 - SEL-3355 RTAC Unit (4 pages)
9.3 - SEL-3505 Automation Controller (2 pages)
9.4 - SEL-751 Protection Relay (3 pages)
9.5 - SEL-451-5 Protection Relay (4 pages)
9.6 - SEL-FLT-FLR Fault and Load Transmitter & Receiver (2 pages)
9.7 - G&W Automated Solid Dielectric Switchgear (8 pages)
9.8 - Largo Vanadium Flow Battery (2 pages)
9.9 - District Energy System Schematics (10 pages)
9.10 - Wastewater Treatment Plant Schematic (as posted on ACSD website, 1 page)

HCE Microgrid & District Energy Feasibility Report
One-Line Diagram, Energy Box
Microgrid Staging

RMH Group, November 19, 2021
Job #20540

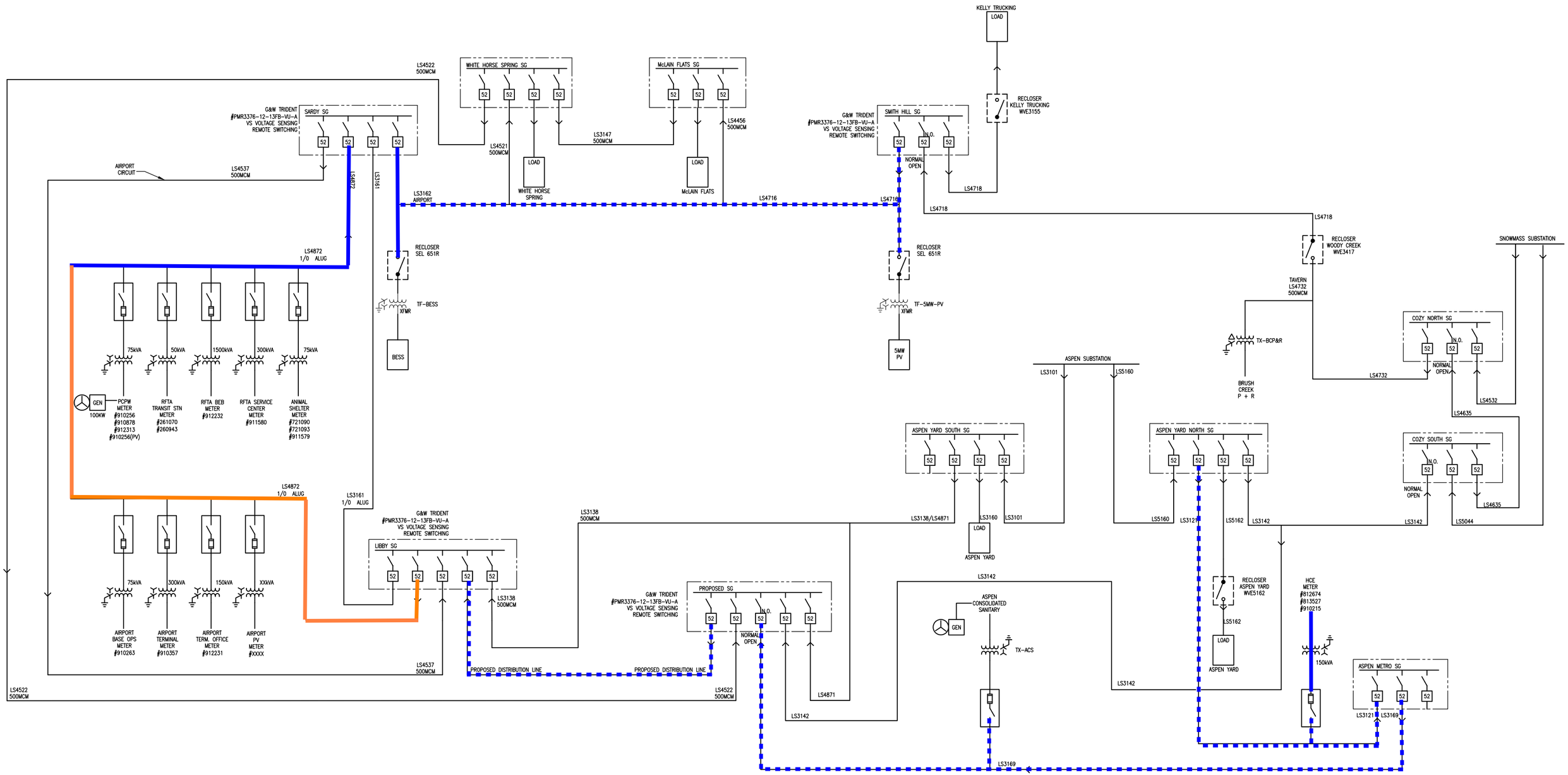

SEL-3355-2 Automation Controller

Improve Reliability, Availability, and Serviceability With a Rugged Automation Controller

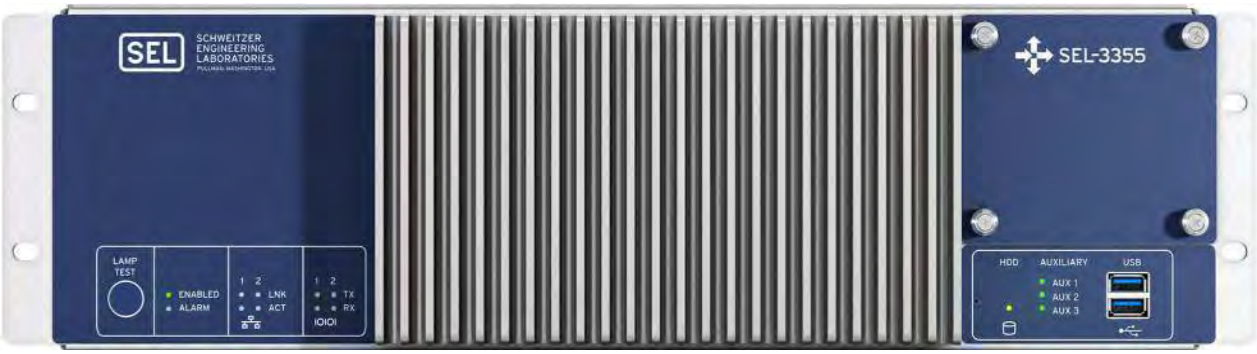

The SEL-3355-2 Automation Controller uses a high-performance x86-64 architecture processor to support modern operating systems like Microsoft Windows and Linux. The extremely rugged SEL hardware of the SEL-3355-2 enables you to use your choice of automation controller operating system and software in very harsh environments not suitable for general purpose computers.

Integrate the SEL-3355-2 in computing applications that demand high performance, reliability, and low maintenance in extreme, harsh environments. The SEL-3355-2 offers a mean time between failure (MTBF) of at least ten times that of typical industrial computers by eliminating all moving parts, including rotating hard drives and fans; using high-quality solid-state drives; and using error-correcting memory technology. By eliminating vent holes, the SEL-3355-2 significantly reduces dust buildup and foreign contaminants. Dual modular, hot-swappable, ac/dc power supplies eliminate the need for external inverters and enhance system reliability, availability, and serviceability. You can install software from SEL and third-party software vendors to customize the SEL-3355-2 for your specific applications. Every SEL-3355-2 comes with the unprecedented ten-year, worldwide SEL warranty.

Major Features and Benefits

The SEL-3355-2 provides a rugged, easy-to-use automation controller platform for substation, industrial, or other harsh environments.

- **x86-64 Architecture.** The SEL-3355-2 uses the Intel Xeon E3 microprocessor architecture to deliver very high performance and broad operating system and software compatibility. Multiple processor cores and Intel Hyper-Threading Technology enable you to run multiple time-critical applications simultaneously. Choose between 2.0 GHz and 2.8 GHz quad-core CPU options.
- **Operating System Choices.** The SEL-3355-2 may be purchased as hardware only, or it may be purchased with a variety of modern Microsoft Windows operating systems to provide added flexibility and functionality along with enhanced security features.
- **Form Factor.** The SEL-3355-2 is built on a 19” rack-mount chassis, designed for substation and industrial control applications. The system includes rear-panel I/O connectors for linking to networks,

peripherals, storage, video, audio, alarm, and serial I/O—all with protection against electrical shock and surge.

- **Power Supply.** The SEL-3355-2 supports two load-sharing, hot-swappable power supply modules, enabling you to power the SEL-3355-2 from two independent power sources for maximum availability and without needing to use inverters.
- **Mass Storage.** The SEL-3355-2 supports four 2.5-inch SATA drives, which are hot-swappable and accessible after removing the front drive-bay panel. High-performance, industrial-rated, solid-state drives (SSD) are available as ordering options.
- **RAID.** The integrated SATA controller supports Redundant Array of Independent Disks (RAID) configurations to maximize data availability and improve storage volume performance.
- **Display Interfaces.** DVI, DisplayPort, or HDMI video connections enable you to connect as many as three simultaneous, independent, high-definition displays.
- **Audio Interface.** Analog HD audio inputs and outputs enable connection to amplified speakers, microphone, and audio sources for clear audible user feedback, audio capture and analysis, and voice recognition. Digital audio can be streamed through the digital display interfaces for simple integration and high-definition surround-sound.
- **USB Connectivity.** The SEL-3355-2 has four rear-panel and two front-panel USB ports for connection to a local keyboard, mouse, and any USB peripherals. Each port is individually current-limited, protecting the system from external short circuits, and enabling high-power devices such as USB hard drives to be powered from any USB port.
- **PCIe Expansion.** The SEL-3355-2 supports as many as four standard PCIe form-factor expansion cards and one 32-bit PCI card, enabling you to customize the system I/O to meet your application needs. Choose from a selection of SEL PCIe expansion cards or install your own custom, third-party expansion card.
- **Ethernet.** Two 10/100/1000 Mbps Ethernet port connections on the rear panel support high-speed network connectivity and enable connections to independent networks or redundant paired network connections. Network interface cards such as the SEL-3390E4 Quad-Gigabit Ethernet Card can be added to the SEL-3355-2 for additional network connectivity.
- **Serial I/O.** Two standard EIA-232 serial ports enable connection to adjacent electronic devices such as automation controllers, communications radios, and modems. As many as four SEL-3390S8 Serial Expansion Cards can be added to the SEL-3355-2 for applications that require many serial I/O connections and IRIG time synchronization and distribution.
- **System Monitoring and Watchdog.** An embedded controller works in unison with the SEL SysMon software to provide an extra level of automation controller system reliability and to detect failures in the application software or operating system. The system logs any abnormal conditions, enables the system alarm to alert operators of a problem, and, if necessary, can perform a self-restart to return to a normal operating state.
- **Alarm Contact Output.** SEL SysMon software controls the alarm contact output to signal in case of system health problems or malfunctions. The Form C contact supports both normally open and normally closed alarm operation.
- **Remote Management.** The SEL-3355-2 supports remote access over Ethernet by using Windows Remote Desktop or Intel vPro Active Management Technology (AMT), enabling full access to system video, keyboard, mouse, and storage.

Functional Overview

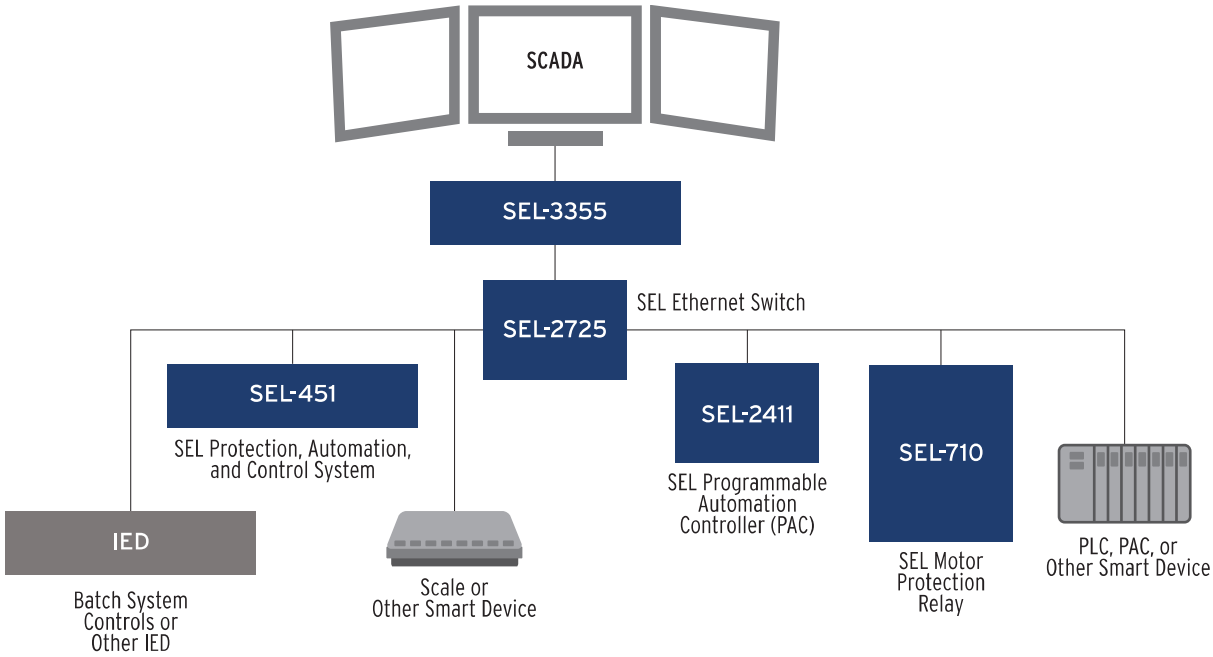

Figure 1 Functional Diagram in Utility Substation Applications

Watchdog Functionality

An embedded controller provides an extra level of automation controller system reliability. One function of the embedded controller is to restart the automation controller if there is an operating system problem or a problem with specific software services running on the operating system.

SEL System Monitor

SEL System Monitor software monitors system performance and component health. Alerts for alarm conditions are issued on configurable thresholds. Example thresholds include CPU usage, free disk space, and available system memory.

Ethernet

Ethernet connections allow the SEL-3355-2 to connect to as many as ten separate, high-speed Ethernet networks via two built-in gigabit Ethernet ports, plus eight additional ports by using two SEL-3390E4 PCIe network interface cards. Aggregate several ports for increased performance or redundancy or separate local area networks (LANs) for control, data, or engineering access.

Time

The SEL-3390S8 serial expansion card accepts IRIG-B time-code input for precise time input and distribution to connected devices.

EIA-232/EIA-485/EIA-422 Ports

The SEL-3355-2 automation controller platform comes standard with two built-in EIA-232 DB-9 ports and, optionally, as many as 24 rear-panel EIA-232/422/485 ports with RJ45 format connectors by using the SEL-3390S8 PCIe serial expansion card. Serial expansion communications ports are software selectable to function as standard EIA-232/422/485 ports with +5 V power.

Alarm Output

An alarm contact output on the rear panel can be used to signal internal errors and operating system malfunctions.

Programmable LEDs

Program three front-panel bicolor LEDs for use with your custom applications.

Out-of-Band Management

Intel vPro Active Management Technology (AMT) provides out-of-band management for security, configuration, and monitoring.

Applications

Virtualization for HMI and Other Applications

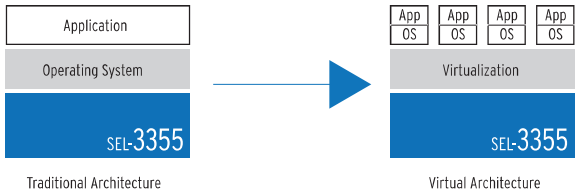

Figure 2 SEL-3355-2 OS and Application Virtualization Platform

Create your own virtualization appliance by leveraging Intel Virtualization Technology (VT-x) to allow one hardware platform to function as multiple "virtual" platforms. Isolate your computing activity onto separate virtual machines to maintain productivity and realize improved manageability and reduced downtime. For example, run a virtualized OS specifically for your HMI or other essential but noncritical applications. Should your HMI require that the system be restarted, simply restart the virtual machine and avoid an outage for your other critical processes. Similarly, multiple SEL-3355-2 automation controller platforms may be virtualized and entire operating systems transparently migrated from one physical SEL-3355-2 to another for hardware upgrades, security or software updates, or testing purposes.

Control System Applications

Use the SEL-3355-2 for process control applications, including as an HMI or for protocol conversion and high-speed control when working with other SEL products and solutions.

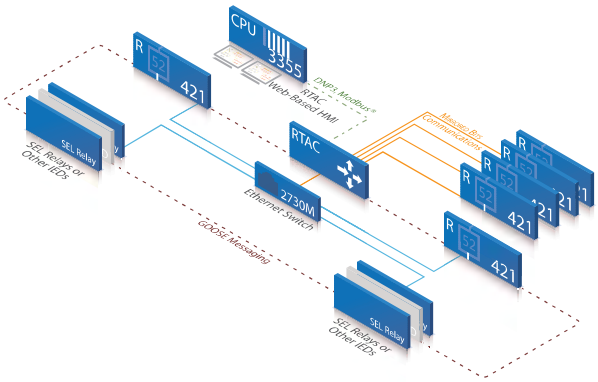

Figure 3 High-Speed Control With SEL Mirrored Bits and IEC 61850 GOOSE Communications

Security Applications

Improve security with a single sign on (SSO), enabled through using the SEL-3355-2 as a local Lightweight Directory Access Protocol (LDAP) server. Centrally manage user accounts and group memberships with Microsoft Active Directory or with your choice of back-end database support.

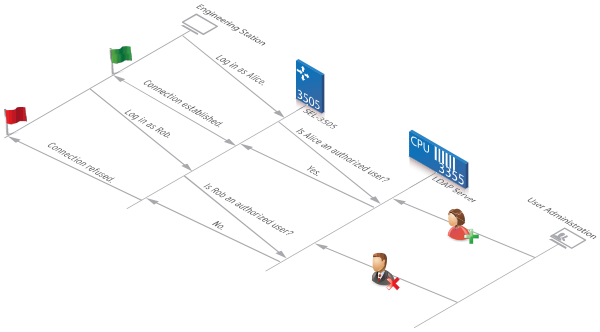

Figure 4 SEL-3355-2 as Remote Read-Only Domain Controller Performing Central Authentication Using LDAP

Disturbance Recording System for PRC-002-2

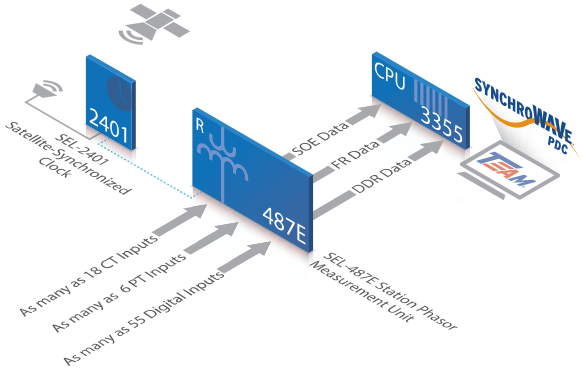

Figure 5 Reliable Hardware for Running Your Disturbance Recording System

Event Collection Applications

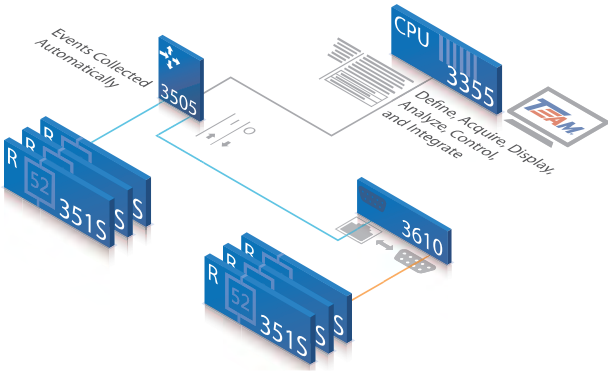

Figure 6 IED Event Collection With Optional acSELerator Team® SEL-5045 Software

SEL-3505/SEL-3505-3 Real-Time Automation Controller

Major Features and Benefits

The SEL-3505 and SEL-3505-3 Real-Time Automation Controllers (RTAC) combine the power of IEC 61131 PLC logic with the best features of a communications processor in a small, low-power package. With eight digital inputs, three Form C digital outputs, three serial ports, and industry protocols, the SEL-3505-3 is perfect for adding automation to recloser cabinets and other space-limited locations. The SEL-3505 offers four serial ports, one input and one output with an optional internal modem. In this data sheet, SEL-3505 refers to both the SEL-3505 and the SEL-3505-3, unless otherwise specified.

- **Simple Setup.** Build a system quickly using ACSELERATOR RTAC® SEL-5033 Software preconfigured templates for SEL relays and other communications connections. The Tag Processor provides methods for visually mapping data relationships between communications protocols.
- **Multiple Functions in One Reliable Device.** Use a single SEL-3505 as a remote terminal unit (RTU), protocol gateway, logic processor, PAC, engineering port server, event processor, and SER logger/viewer.
- **Proven Reliability.** Depend on a rugged device designed and tested to meet or exceed protective relay standards for vibration, electrical surges, fast transients, and extreme temperatures, as well as meet or exceed IEEE 1613, Standard Environmental and Testing Requirements for Communications Networking Devices in Electric Power Substations.
- **IEC 61850.** Integrate high-speed control schemes between the SEL-3505 and relays with IEC 61850 GOOSE peer-to-peer messaging.
- **Standard I/O.** Wire loose field I/O, with as many as eight binary inputs and as many as three binary outputs, directly to the SEL-3505.

- **Protection Against Malware and Other Cybersecurity Threats.** Protect your RTAC system with exe-GUARD®, which uses advanced cryptographic algorithms to authorize the execution of any program or service on the system. Any tasks not approved by the whitelist are blocked from operation.
- **User Security.** Assign individual user and role-based account authentication and strong passwords. Use Lightweight Directory Access Protocol (LDAP) for central user authentication.
- **Integrated Security Management.** Comply with NERC/CIP user authentication, logging, and port control requirements. Use the integrated light sensor and accelerometer for cabinet intrusion detection.
- **Standard IEC 61131-3 Logic Design.** Create innovative logic solutions directly in ACSELERATOR RTAC by using any of the editor tools: Tag Processor, Structured Text, Ladder Logic, or Continuous Function Chart.
- **Flexible Protocol Conversion.** Apply any available client or server protocol on any serial or Ethernet port. Two of the SEL-3505 and three of the SEL-3505-3 serial ports can be used in software-selectable EIA-232 or EIA-485 mode. Choose optional copper or fiber connectors for the two rear Ethernet ports.
- **Synchrophasor Technology.** Integrate synchrophasor messages from relays or phasor measurement units (PMUs) in your system by using the IEEE C37.118 client protocol. Use these messages for logic and control in the station or convert them to DNP3 or other protocol for SCADA usage.
- **Data Management.** Map and scale data points easily between protocols in small and large systems. You can also normalize IED data into common data types, time-stamp formats, and time zones.
- **Single-Point Engineering Access.** Gain engineering access to station IEDs through a single serial port, dial-up modem, or high-speed network connection.

Product Overview

Seamless System Configuration

ACSELERATOR RTAC is a Microsoft® Windows® compatible configuration software for offline and online use with the SEL-3505. A project in ACSELERATOR RTAC contains the complete configuration, settings, and logic for an individual RTAC device. Preconfigured device templates are available for you to add all device and master connections to the project tree view.

Once you create the settings for a specific device connection, improve engineering efficiency by saving a custom device template for later use with similar projects. Share custom templates via email or network for even greater savings.

The Tag Processor view facilitates the mapping of operational data quickly between IEDs and SCADA. ACSELERATOR RTAC is compatible with Microsoft Excel® and other programs, so you can save time and increase accuracy by copying SCADA maps from the source.

There is no need to install or learn more than one software interface. Use the Structured Text, Ladder Diagram, or Continuous Function Chart editors included with ACSELERATOR RTAC to develop custom IEC 61131 logic.

Data Concentration and Protocol Conversion

Configure each serial or Ethernet port to use any of the client, server, or peer-to-peer protocols available for the SEL-3505. For example, when you use IEEE C37.118 protocol to receive synchrophasor messages, you can map analog or Boolean tags and time stamps to DNP3 and send the data to SCADA very efficiently.

Additionally, when you need to define relay connections in a primary/backup arrangement, use the Tag Processor to map relay tags so that the master stations will receive power system information only from the active relay.

SEL-751 Feeder Protection Relay

Directional Overcurrent, Arc-Flash Detection, and High-Impedance Fault Detection

Five-Inch, Color Touchscreen Display Model With Four Pushbuttons

Five-Inch, Color Touchscreen Display Model With Eight Pushbuttons

Two-Line Display Model With Four Pushbuttons

Two-Line Display Model With Eight Pushbuttons

New Features

- Disconnect control from the Bay Screens application.
- Three-position disconnects for increased safety.
- A built-in web server that simplifies access to relay data and supports firmware upgrade.
- Faster firmware downloads via the Ethernet port.
- IEEE 1588-2008 firmware-based Precision Time Protocol (PTP) provides ease of integration.
- EtherNet/IP provides ease of integration for industrial automation applications.
- IEC 61850 Test Mode support with standard operating modes for easy commissioning.
- Early detection of cable insulation breakdown with incipient cable fault detection.

Major Features and Benefits

The SEL-751 Feeder Protection Relay provides a comprehensive combination of protection, fault-locating features, monitoring, control, and communication in an industrial package.

The SEL-751 protection features depend on the model selected. The models are configured with specific current/voltage input cards. *Table 1* shows current (ACI) and voltage (AVI) card selections for the SEL-751 models.

Table 1 Current (ACI) and Voltage (AVI) Card Selection for SEL-751 Models

Model Description	Slot Z Card Option (MOT String Digital Number 14, 15)	Slot Z Inputs	Slot E Card Option (MOT String Digits Number 12, 13)	Slot E Inputs
Base SEL-751 AC Currents Only	4 ACI (A1, A2, A3, A5, A6, A7)	IA, IB, IC, IN	None (0X)	None
SEL-751 With AC Voltages (300 Vac)	4 ACI/3 AVI (81, 82, 83, 85, 86, 87)	IA, IB, IC, IN, VA, VB, VC	None (0X)	None
SEL-751 With LEA AC Voltages (8 Vac)	4 ACI/3 AVI (L1, L2, L3, L5, L6, L7)	IA, IB, IC, IN, VA, VB, VC	None (0X)	None
SEL-751 With AC Phase Voltages (300 Vac), Vsync (300 Vac), Vbat (300 V) Input, and 4 Arc-Flash Detection Inputs	4 ACI/3 AVI (81, 82, 83, 85, 86, 87)	IA, IB, IC, IN, VA, VB, VC	2 AVI/4 AFDI (70)	VS, VBAT, AF1, AF2, AF3, AF4
SEL-751 With LEA AC Phase Voltages (8 Vac), LEA Vsync (8 Vac), Vbat (300 V) Input, and 4 Arc-Flash Detection Inputs	4 ACI/3 AVI (L1, L2, L3, L5, L6, L7)	IA, IB, IC, IN, VA, VB, VC	2 AVI/4 AFDI (L0)	VS, VBAT, AF1, AF2, AF3, AF4

The SEL-751 offers an extensive variety of protection features, depending on the model and options selected. *Table 2* lists the protection features available in each model.

Table 2 SEL-751 Protection Elements (Sheet 1 of 2)

Protection Element		Slot Z 4 ACI Card (Current Only Model) With 1 A or 5 A Neutral Channel	Slot Z 4 ACI/3 AVI Card With 1 A or 5 A Neutral Channel	Slot Z 4 ACI/3 AVI Card With 200 mA Neutral Channel
50P	Max. Phase Overcurrent	X	X	X
67P	Max. Phase Overcurrent With Directional Control		X[a]	X[b]
50Q	Neg.-Seq. Overcurrent	X	X	X
67Q	Neg.-Seq. Overcurrent With Directional Control		X[a]	X[b]
50G	Residual Overcurrent	X	X	X
67G	Residual Overcurrent With Directional Control		X[a]	X[b]
50N	Neutral Overcurrent	X	X	X
67N	Neutral Overcurrent With Directional Control			X[b]
50INC	Incipient Cable Fault Detection	X	X	X
51*m*P	Phase Time Overcurrent (*m* = A, B, C)	X	X	X
51P	Max. Phase Time Overcurrent	X	X	X
51P	Max. Phase Time Overcurrent With Directional Control		X[a]	X[b]
51G	Residual Time Overcurrent	X	X	X

Table 2 SEL-751 Protection Elements (Sheet 2 of 2)

Protection Element		Slot Z 4 ACI Card (Current Only Model) With 1 A or 5 A Neutral Channel	Slot Z 4 ACI/3 AVI Card With 1 A or 5 A Neutral Channel	Slot Z 4 ACI/3 AVI Card With 200 mA Neutral Channel
51G	Residual Time Overcurrent With Directional Control		X[a]	X[b]
51Q	Neg.-Seq. Time Overcurrent	X	X	X
51Q	Neg.-Seq. Time Overcurrent With Directional Control		X[a]	X[b]
51N	Neutral Time Overcurrent	X	X	X
51N	Neutral Time Overcurrent With Directional Control			X[b]
SEF	Sensitive Earth Fault			X
HBL	Second- and Fifth-Harmonic Blocking	X	X	X
FLOC	Fault Locator		X	X
27	Undervoltage (Phase, Phase-to-Phase, Vsync)		X	X
59	Overvoltage (Phase, Phase-to-Phase, Seq., Vsync)		X	X
27I	Inverse Time Undervoltage		X	X
59I	Inverse Time Overvoltage		X	X
60LOP	Loss of Potential		X	X
32	Directional Power		X	X
49T	IEC Thermal (Line/Cable)	X	X	X
55	Power Factor		X	X
78VS	Vector Shift		X	X
81	Over- and Underfrequency	X	X	X
81R	Rate-of-Change of Frequency		X	X
81RF	Fast Rate-of-Change of Frequency		X	X
25	Synchronism Check		X[c]	X[c]
BF	Breaker Failure	X	X	X
49RTD	Resistance Temperature Detectors (RTDs)	X[d]	X[d]	X[d]
79	Reclosing	X[d]	X[d]	X[d]
HIF AST	High-Impedance Fault Detection With Arc Sense Technology		X[d]	X[d]
AFT	Arc-Flash Detection	X[d]	X[d]	X[d]

[a] Available when ordered with the directional option. The 1 A/5 A neutral channel is suitable for solidly grounded systems and also impedance-grounded systems, depending on the available fault current level.
[b] Available when ordered with the directional option. The 200 mA neutral channel is suitable for ungrounded, low-impedance grounded, high-impedance grounded, and Petersen coil-grounded applications.
[c] Available with the 2 AVI/4 AFDI card in Slot E.
[d] Available as ordering options.

SEL-451-5 Protection, Automation, and Bay Control System

Key Features and Benefits

The SEL-451-5 Protection, Automation, and Bay Control System integrates bay control for breakers and disconnect switches with full automation and protection in one device.

- **Protection.** Customize distribution protection with multiple instantaneous and time-overcurrent elements with SELOGIC® control equations. Best Choice Ground Directional Element® logic optimizes directional element performance and eliminates the need for many directional settings. Provide comprehensive protection for two breakers with one relay.
- **Commissioning.** Rapidly commission your Bay Control with preconfigured bay arrangements. Choose among different bus configurations, including single- and dual-busbar, transfer bus, tie breaker, breaker-and-a-half, ring-bus, double-bus/double-breaker, and source transfer configurations. These bus arrangements allow easy status and control of as many as ten disconnect switches and two breakers. Additional user-selectable bay types are available via ACSELERATOR QuickSet® SEL-5030 Software that can be downloaded at selinc.com.
- **Automation.** Take advantage of enhanced automation features that include 32 programmable elements for local control, remote control, protection latching, and automation latching. Local metering on the large format front-panel LCD eliminates the need for separate panel meters. Serial and Ethernet links efficiently transmit key information, including metering data, protection element and control input/output (I/O) status, IEEE C37.118 Synchrophasors, IEC 61850 Edition 2 GOOSE messages, Sequential Events Recorder (SER) reports, breaker monitor, relay summary event reports, and time synchronization. Apply expanded SELOGIC control equations with math and comparison functions in control applications. Incorporate as many as 1000 lines of automation logic to speed and improve control actions.
- **Software-Invertible Polarities.** Invert individual or grouped CT and PT polarities to account for field wiring or zones of protection changes. CEV files and all metering and protection logic use the inverted polarities, whereas COMTRADE event reports do not use inverted polarities but rather record signals as applied to the relay.
- **Synchrophasors.** Make informed load dispatch decisions based on actual real-time phasor measurements from SEL-451 relays across your power system. Record streaming synchrophasor data from SEL-451 relays for system-wide disturbance recording. Control the power system using local and remote synchrophasor data.

- **High-impedance Fault Detection.** The optional high-impedance fault (HIF) detection element operates for small current ground faults typically caused by downed conductors on surfaces such as earth, concrete or other poorly conductive materials. HIF event data are made available in standard COMTRADE format.
- **Ethernet Access.** Access all relay functions with the optional Ethernet card. Interconnect with automation systems by using IEC 61850 Edition 2 or DNP3 protocol directly. Use file transfer protocol (FTP) for high-speed data collection. Connect to substation or corporate LANs to transmit synchrophasors in the IEEE C37.118–2005 format by using TCP or UDP Internet protocols.
- **Parallel Redundancy Protocol (PRP).** Provide seamless recovery from any single Ethernet network failure, in accordance with IEC 62439-3. The Ethernet network and all traffic are fully duplicated with both copies operating in parallel.
- **IEC 61850 Operating Modes.** The relay supports IEC 61850 standard operating modes such as Test, Blocked, On, and Off.
- **IEEE 1588, Precision Time Protocol.** The relay shall support Precision Time Protocol version 2 (PTPv2). PTP provides high-accuracy timing over an Ethernet network.
- **Digital Relay-to-Relay Communications.** Enhanced MIRRORED BITS® communications can monitor internal element conditions between bays within a station, or between stations, using SEL fiber-optic transceivers. Send digital, analog, and virtual terminal data over the same MIRRORED BITS channel.
- **Monitoring.** Schedule breaker maintenance when accumulated breaker duty (independently monitored for each pole of two circuit breakers) indicates possible excess contact wear. Electrical and mechanical operating times are recorded for both the last operation and the average of operations since function reset. Two independent DC monitors provide notification of substation battery voltage problems even if voltage is low only during trip or close operations.
- **Breaker Failure.** High-speed (less than one cycle) open-pole detection logic reduces coordination times for critical breaker failure applications. Apply the SEL-451 to supply breaker failure protection for one or two breakers. Logic for breaker failure retrip and initiation of transfer tripping is included.
- **Sequential Events Recorder (SER).** Record the last 1000 events, including setting changes, power-ups, and selectable logic elements.
- **Dual CT Input.** Apply with ring bus, breaker-and-a-half, or other two-breaker schemes. Combine currents within the relay from two sets of CTs for protection functions, but keep them separately available for monitoring and station integration applications.
- **Comprehensive Metering.** Improve feeder loading by using built-in, high-accuracy metering functions. Watt and VAR measurements optimize feeder operation. Minimize equipment needs with full metering capabilities including rms, maximum/minimum, demand/peak, energy, and instantaneous values.
- **High-Accuracy Time-Stamping.** Time-tag binary COMTRADE event reports with real-time accuracy of better than 10 µs. View system state information to an accuracy of better than 1/4 of an electrical degree.
- **Oscillography and Event Reporting.** Record voltages, currents, and internal logic points at a sampling rate as fast as 8 kHz. Off line phasor and harmonic-analysis features allow investigation of bay and system performance.
- **Reclosing.** Incorporate programmable reclosing of one or two breakers into an integrated substation control system. Synchronism and voltage checks from multiple sources provide complete bay control.
- **Fault Locator.** Efficiently dispatch line crews to quickly isolate line problems and restore service faster.
- **IEC 60255-Compliant Thermal Model.** Use the relay to provide a configurable thermal model for the protection of a wide variety of devices.
- **Rules-Based Settings Editor.** Communicate with and set the relay by using an ASCII terminal, or use QuickSet to configure the SEL-451 and analyze fault records with relay element response.
- **Auxiliary Trip/Close Pushbuttons.** These optional pushbuttons are electrically isolated from the rest of the relay. They function independently from the relay and do not need relay power.
- **Low-Energy Analog (LEA) Inputs.** Reduce costs and save space with as many as six C37.92-compliant LEA voltage inputs.
- **Time-Domain Link (TiDL®) Technology.** The relay supports remote data acquisition through use of an SEL-2240 Axion®. The Axion provides remote analog and digital data over an IEC 61158 EtherCAT® TiDL network. This technology provides very low and deterministic latency over a fiber point-to-point architecture. The SEL-451 relay can receive fiber links from as many as eight Axion remote data acquisition nodes.

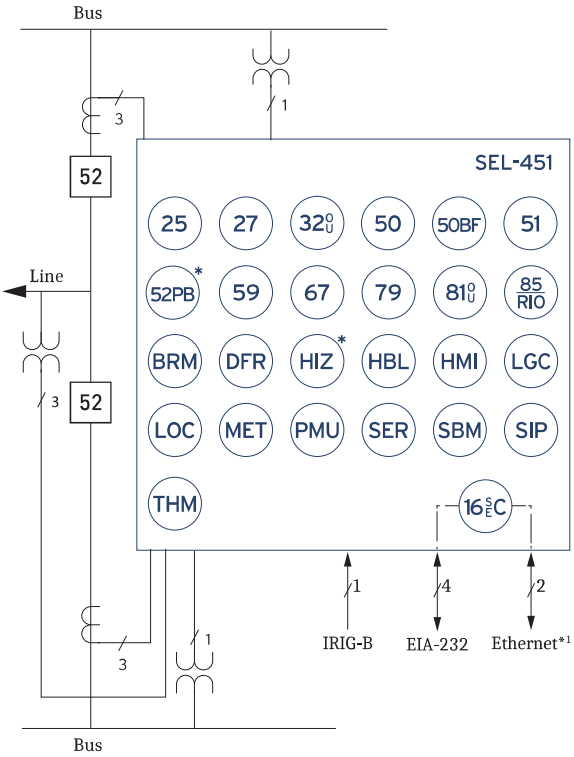

ANSI NUMBERS/ACRONYMS AND FUNCTIONS	
25	Synchronism Check
27	Undervoltage
32 (O, U)	Over- and Underpower
50	Overcurrent
50BF	Dual Breaker Failure Overcurrent
51	Time-Overcurrent
52PB	Trip/Close Pushbuttons*
59	Overvoltage
67	Directional Overcurrent
79	Autoreclosing
81 (O, U)	Over- and Underfrequency

ADDITIONAL FUNCTIONS	
16 SEC	Access Security (Serial, Ethernet)
50G	Best Choice Ground
85 RIO	SEL Mirrored Bits Communications
BRM	Breaker Wear Monitor
DFR	Event Reports
HBL	Harmonic Blocking
HIZ	High-Impedance Fault Detection Arc Sense™ Technology (AST)*
HMI	Operator Interface
LDE	Load Encroachment
LGC	Expanded SELogic Control Equations
LOC	Fault Locator
MET	High-Accuracy Metering
PMU	Synchrophasors
SBM	Station Battery Monitor
SER	Sequential Events Recorder
SIP	Software-Invertible Polarities
THM	IEC 60255-Compliant Thermal Model
TiDL	Time-Domain Link Remote Data Acquisition

[1]Copper or Fiber-Optic * Optional Feature

Figure 1 Functional Diagram

Product Overview

PROTECTION

- Synchrophasors
- Directional Overcurrent (67)
- Dual Circuit Breaker Failure (50 BF)
- Synchronism Check (25)
- Instantaneous Overcurrent (50)
- Time Overcurrent (51)
- Over/Undervoltage (27/59)
- Over/Underpower (32)
- Frequency (81)
- Reclosing (79)
- Expanded SELOGIC Control Equations
- Event Reports and Oscillography
- Sequential Events Recorder (SER)
- Dual Breaker Condition Monitor
- Station Battery Monitor
- Fault Locator
- Load-Encroachment Supervision
- TiDL Remote Data Acquisition

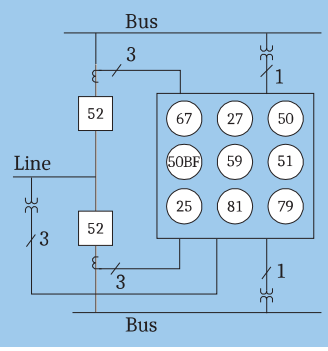

AUTOMATION

- Ethernet Communications Protocols
  IEC 61850 Edition 2
  DNP3 LAN/WAN
  FTP
  Telnet
  PRP
  PTP
  C37.118 Synchrophasors
- Ethernet Media Options
  10/100BASE-T Twisted Pair Network
  100BASE-FX Fiber-Optic Network
- Serial Communications Protocols
  SEL ASCII Commands
  SEL MIRRORED BITS Communications
  SEL Fast Messages
  DNP3
  IEEE C37.118 Synchrophasors V7.3
- Password Separation of Automation and Protection

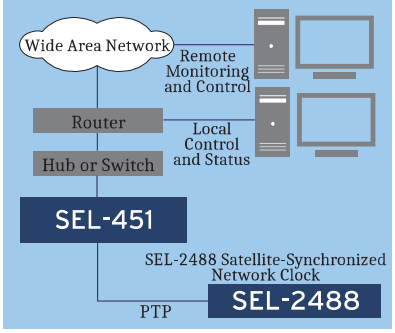

BAY CONTROL

- Configurable Bay Screen Display
- Local Control—As many as Two Breakers
- Status Indication—As many as Three Breakers
- Local Control and Status Indication—As many as 20 Disconnect Switches
- Bay Screen Displays—As many as 24 Analog Quantities
- Configurable Labels for Bus, Breakers, Disconnect Switches, and Bay
- Password-Protected Control Functions
- Local and Remote Modes
- Control Confirmation Request
- Operation Alarm for Breaker and Disconnect Switch
- As many as 10 individual one-line diagrams available to HMI

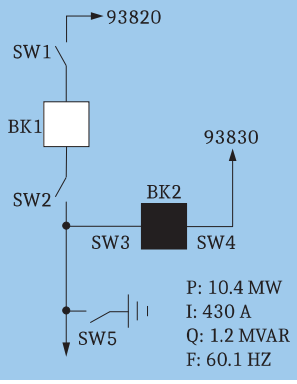

Figure 2 Product Overview

Protection Features

Software-Invertible Polarities Save Commissioning Time and Costs

The SEL-451 provides software-invertible CT and PT polarities. You can invert individual phase CT and PT inputs to account for field wiring or invert whole CT terminals to change a relay zone of protection without having to change field wiring.

All signal processing uses the software-inverted polarities for CEV file generation, metering, and protection logic. COMTRADE file generation is isolated from the impacts of the inverted polarities, and records signals as applied to the relay terminals.

Directional Elements Increase Sensitivity and Security

The SEL-451 provides multiple directional elements to optimize security and sensitivity. Use ground and negative-sequence directional overcurrent elements to detect high-resistance faults when using communications-assisted tripping schemes.

The SEL-451 includes a number of directional elements for supervision of overcurrent elements. The negative-sequence directional element uses the same patented principle proven in our SEL-351 Relay. This directional element can be applied in virtually any application, regardless of the amount of negative-sequence voltage available at the relay location.

SEL-FLT/SEL-FLR Fault and Load Transmitter and Receiver System

Accelerate System Restoration

Key Features and Benefits

The SEL-FLT Fault and Load Transmitter and the SEL-FLR Fault and Load Receiver act in unison as a wireless line sensor system for overhead distribution circuits. The sensor system provides fault detection and accurate load data to a centralized location, such as a SCADA system or outage management system (OMS). The line sensors and concentrator communicate via a purpose-built wireless protocol optimized for fault-monitoring applications.

- **Reliability Improvement.** Turn accurate fault data into actionable information to quickly identify fault locations and restore power.
- **Load Data Monitor.** Measure load current with a typical accuracy of 1 percent in near-real time for planning and making switching decisions.
- **High-Visibility Display.** Guide line crews to fault locations with the multifunctional LED display, which is visible from greater than 50 m (164 ft) during the daytime in any direction.
- **Simple Deployment.** Reduce installation risk to personnel with the user-friendly, lightweight design of the SEL-FLT. Installation requires just a single hot stick.
- **Scalable Solution.** Expand wireless sensor deployment as needed to meet operational needs. Start with a small deployment and increase the number of SEL-FLT and SEL-FLR devices to increase system visibility.
- **Rugged Design.** Monitor load and detect faults reliably in any application or environment with the outdoor-rated SEL-FLT compliant with the IEEE 495 standard.
- **Seamless System Integration.** Integrate the DNP3 protocol output easily into a SCADA network or OMS using any existing TCP/IP backhaul, including cellular.

- **Flexible Communications.** Use an SEL-3061 Cellular Router, direct fiber, or a radio of your choice that supports DNP3 communication over Ethernet to backhaul data from SEL-FLR to SCADA.
- **Intuitive Interface.** Configure device settings and network settings through a secure web interface in the SEL-FLR.
- **Long Product Life.** Reduce ongoing maintenance with line-powering, over-the-air software updates, long product life, and a 10-year warranty.

Functional Overview

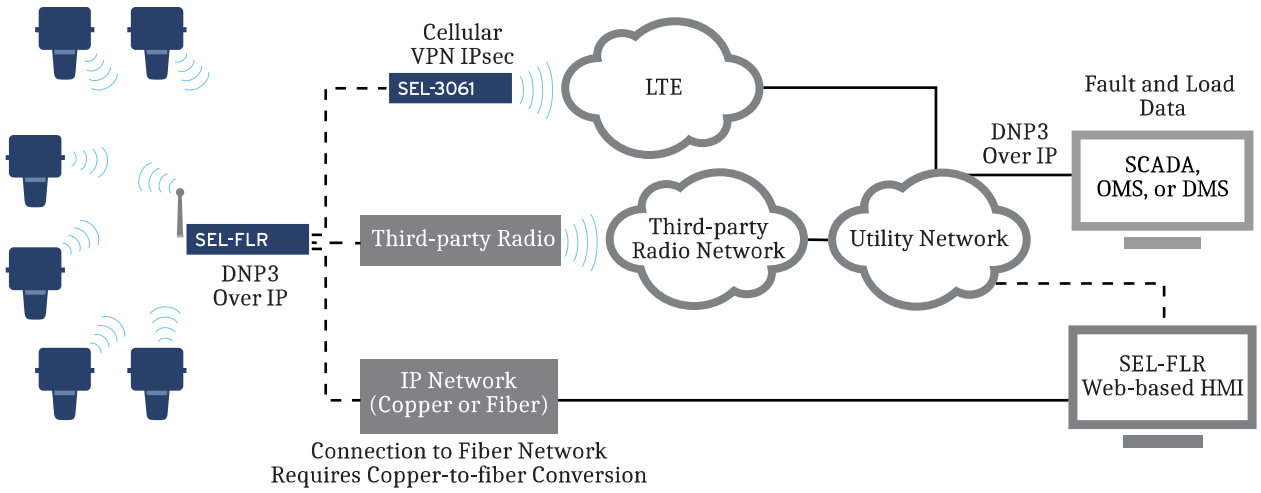

Figure 1 Functional Diagram

Device Overview

SEL-FLT

Figure 2 SEL-FLT Device Overview

Trident® Automated Solid Dielectric Switchgear

G&W Electric

Engineered to order. Built to last.

When you need visible break... Trust Trident with SafeVu™

Trident-SR w/ SafeVu and Trident-SR Switch Series

Utilizing the same magnetic actuator technology as G&W Electric's Viper® reclosers, the Trident-SR series switches offer extremely fast operation speeds of just 3.5 cycles for both load and fault interrupting operations. Its flexible design can be configured to provide a wide range of solutions for any application, from basic remote operation, to distribution automation, or Smart Grid schemes. Trident-SR switches offer multiple application functionality within a same compact switch footprint.

Trident-SR w/ SafeVu
Available up to 15.5kV

SafeVu Visible Break

The load break and fault interrupter ways are available with G&W's SafeVu feature, which provides an integrated visible break disconnect switch in series with the vacuum interrupter. This eliminates the need to remove elbows or use externally mounted linkage systems to provide a visible open. Switches equipped with SafeVu incorporate redundant mechanical interlocks to ensure the vacuum bottle is open prior to the operation of the visible break switch.

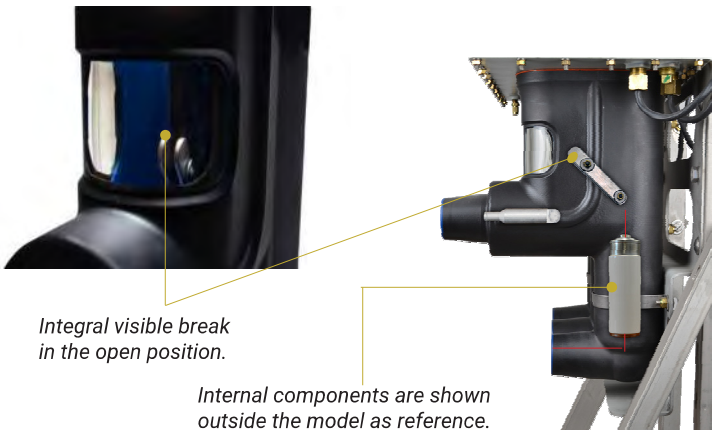

Integral visible break in the open position.

Internal components are shown outside the model as reference.

Automation Flexibility

The Trident-SR switch series was specifically designed to provide the high speed switching required for distribution automation schemes. Switch configurations can be paired with various control packages to provide the features required for a wide variety of applications including Automatic Transfer in under 10 cycles.

Trident-SR

Ratings for Trident

The switch is designed, tested and built per IEEE C37.74 for load break switching, IEEE C37.60 for fault interrupting, IEEE 386 for bushing specification, and IEC 60529 for environmental protection rating. Padmount switch enclosures are designed per C57.12.28 or C57.12.29. Certified test reports are available upon request.

Voltage Class (kV)	15	25	35
Max. System Voltage (kV)	15.5	27‡	38
BIL (kV) 110Δ 125 150	110Δ	125	150
Continuous Current (A)	630§	630§	630§
Load Break Current (A)	630§	630§	630§
AC Withstand, 1 min. (kV)	35	60	70
AC Withstand, Productions, 1 min. (kV)	34	40	50
DC Withstand, 15 min.	53	78	103
Momentary Current, RMS, asym (kA)	20	20	20
Fault Close 3 times, asym (kA)	20	20	20
1 second Current, sym (kA)	12.5	12.5	12.5
Fault Interrupting Current, sym (kA)	12.5	12.5	12.5
Vacuum Interrupter Mechanical Operations	10,000	10,000	10,000

Note:
Δ BIL impulse rating is 95kV when using the SafeVu feature
‡ Up to 29.3kV Max. System Voltage available
§ Up to 900A available on In/Out without SafeVu, Up to 800A available on multiway Trident without SafeVu

Components

Overcurrent Protection
Fault interrupters with SafeVu are equipped with an encapsulated 500:1 or 1000:1 current transformers and fault interrupters without SafeVu are equipped with an encapsulated 200:1 or 400:1 current transformers A wide variety of protective relay packages are available, including relays from SEL and other leading relay suppliers.

External CTs and External PTs
Metering or relaying accuracy current and potential transformers are available for use with protective relay packages.

Operating Handle
G&W will select the appropriate handle based on the application. Handles are operable via hook stick or rope rigging.

Key Interlocks
Key interlocks may be used to ensure safe coordination of equipment. All Trident ways can be equipped with provisions for key interlocks. Key interlocks can be provided, and factory installed if required.

Auxiliary Contacts
Auxiliary contacts are internally mounted to the mechanism housing providing remote indication of switch contact position. One normally open and one normally closed Form C contact is provided. A junction box is available with terminal strip connections for up to three auxiliary contacts.

Voltage Sensing

G&W's Voltage Sensing (VS) Bushings are available in Dead Break Apparatus or 200A Deepwell. The VS is temperature compensated, built-in, voltage measuring system that eliminates the need for PTs in analog phase to ground voltage monitoring. Compared to potential transformers, the VS bushing system offers these benefits:

- Significant cost savings
- Cleaner, less cumbersome installation
- Less space required
- Fewer add-on components which could potentially fail
- Installed and tested prior to shipment

Output	Temperature	Accuracy
0-8VAC	-20°C (-4°F) to +40°C (104°F)	+/- 2%
	-60°C (-76°F) to +65°C (149°F)	+/- 4%
0-120VAC	-60°C (-76°F) to +65°C (149°F)	+/- 5%

Voltage sensors are available as LEA (Low Energy Analog) or 120VAC output. Capacitive voltage sensors encapsulated within the bushings permit voltage reading for network reconfiguration while eliminating the need for add-on sensors and cabling. The phase angle accuracy is +/-1° throughout the full temperature range.

Controls

Each G&W automated switch comes equipped with a pre-installed integral control package. Each control package is built on the platform of SEL hardware, and is pre-programmed and configured to provide the following functionality:

- Local/Remote Actuator Control
- Analog Current Monitoring for all ways
- Analog Voltage Monitoring for two ways
- Overcurrent Protection for all Fault Interrupters
- Remote Position Status Indication for all ways

Each control package is equipped with an integral power supply and optional battery back-up with automated battery test feature. Each control also comes standard with a DNP point map to controls and monitor the switch using SCADA. Ethernet or fiber optic ports for communications are available.

Control located on automated Trident

ATC Packages

Using either an SEL451-5 or SEL751 relay, G&W can supply a control that provides auto-transfer between two sources. Controls are available for common-bus and bustle configurations with transfer in less than 10 cycles.

Control Options

For padmount and dry vault applications, the control can be supplied in either a mild steel NEMA 4 enclosure or a stainless steel NEMA 4X enclosure. Both of these enclosures can be supplied in a compact size (24" tall by 24" wide) or in a larger size 30" tall by 24" wide)) to accommodate additional equipment such as communication devices.

The NEMA 4 and NEMA 4X enclosures have several options including a padlocking handle, convenience outlet, test switches and a document holder.

Part Number Configuration For Trident-SR

Character	1	2	3	4	5		6	7	8		9		10	11	12	13
Sample Part Number	P	M	R	3	2	-	3	7	6	-	12	-	6	FA	VU	-A

#PMR3376-12-13FBVU-A

1. Type of Installation
P = Padmount (enclosure)
V = Vault (no enclosure)

2. Type of Load Break Switches
M =Trident-SR
L = Trident-S*

Leave blank if no load break switches.
Consult factory for other options or combinations of options shown on this page.

** See Trident Spring-Operated Solid Dielectric Switchgear Brochure (GW11-2019).*

3. Type of Fault Interrupter
R =Trident-SR
S = Trident-S*
T = Trident-ST (Single Phase Trip capability)*
F = Trident-S and Trident-ST combination*
U = Unswitched bushings directly on bus

Leave blank if fault interrupters or no unswitched bushings directly on bus.
Consult factory for other options or combinations of options shown on this page.

** See Trident Spring-Operated Solid Dielectric Switchgear Brochure (GW11-2019).*

4. Number of Ways
Enter a number 2 through 6

5. Number of Load Break Switches
Enter a number 2 through 6, up to the number as Ways.

6. Phase
3 = Three Phase

7. Voltage Class (Maximum System Voltage, Ph-Ph)
7 = 15.5kV
8 = 27kV**
9 = 38kV
***Consult factory for 29.3kV options.*

8. Continuous Current
6 = 630A
8 = 800A
9 = 900A

Consult factory for limitations.

9. Fault Interrupting / Close into fault rating
12 = 12.5kA sym. for Fault interrupting switches
20 = 20kA asym. for Load Break switches

10. Model
3 = Single Load Break Way
4 = Single Fault Interrupting Way
6 = 3 Way with 2 Load Break 1 Fault Interrupter
7 = 3 Way with 1 Load Break 2 Fault Interrupter
9 = 4 Way with 2 Load Break 2 Fault Interrupter
10 = 4 Way with 4 Load Break 0 Fault Interrupter
11 = 4 Way with 3 Load Break 1 Fault Interrupter
12 = 4 Way with 1 Load Break 3 Fault Interrupter
13 = 3 Way with 3 Load Break 0 Fault Interrupter
XX = Digit 4&5 if combination not listed above

11. Configuration (Access Style)
FA = Front Access to Bushings and Operators
FB = Front Access to Bushings and Back Access to Operators

Consult factory for additional options.

12. SafeVu included
VU = SafeVu included*** (available up to 15.5kV)
Leave blank if SafeVu not included

****Advise factory if not all ways include SafeVu.*

13. Automated
-A = Automated

Multi-Way Trident		Vault Front Access (FA)		Padmount Front Access (FA)		Padmount Front/Back Access (FB)	
# of Ways	Model	Width Inches (mm)	Weight lbs. (kg)	Width Inches (mm)	Weight lbs. (kg)	Depth Inches (mm)	Weight lbs. (kg)
3	Non-SafeVu	91 (2310)	2300 (1000)	106 (2700)	3200 (1500)	77 (1960)	3500 (1600)
3	SafeVu	100 (2540)	3200 (1500)	115 (2700)	4100 (1900)	92 (2340)	3500 (1600)
4	Non-SafeVu	115 (2920)	2600 (1200)	130 (3300)	3500 (1600)	77 (1960)	3800 (1700
4	SafeVu	124 (3150)	3500 (1600)	145 (3685)	4400 (2000)	92 (2340)	3800 (1700)
5	Non-SafeVu	140 (3560)	3100 (1400)	155 (3685)	3900 (1800)	***Consult Factory***	
5	SafeVu	149 (3780)	3900 (1800)	175 (4445)	4700 (2100)		
6	Non-SafeVu	165 (4190)	3500 (1600)	180 (4590)	4300 (3000)	***Consult Factory***	
6	SafeVu	174 (4420)	4300 (2000)	200 (5080)	5100 (2300)		

Two-Way Vault (In/Out)				
Model	Depth Inches (mm)	Width Inches (mm)	Height Inches (mm)	Weight lbs. (kg)
Non-SafeVu	19 (483)	22 (559)	38 (965)	375 (170)
SafeVu	20 (508)	28 (771)	40 (1016)	375 (170)
Padmount Two-Way				
Model	Depth Inches (mm)	Width Inches (mm)	Height Inches (mm)	Weight lbs. (kg)
Non-SafeVu	44 (1118)	34 (863)	62 (1575)	675 (306)
SafeVu	45 (1143)	41 (1042)	67 (1702)	675 (306)

Two-Way Vault

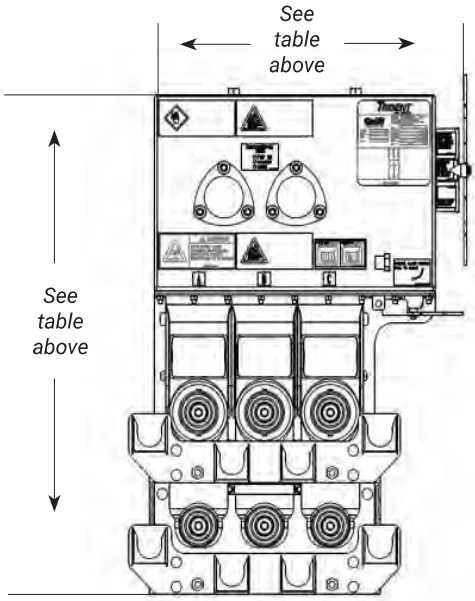

FRONT

Dimensions are approximate.
Do not use for construction.

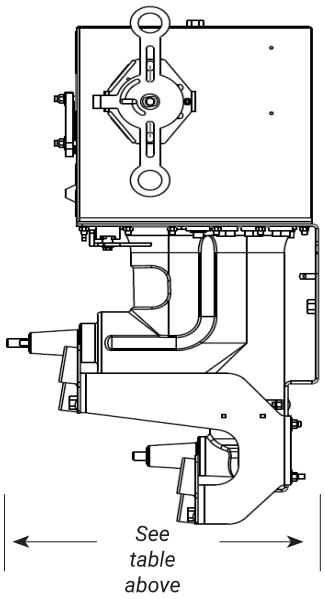

SIDE

Padmount Front Access

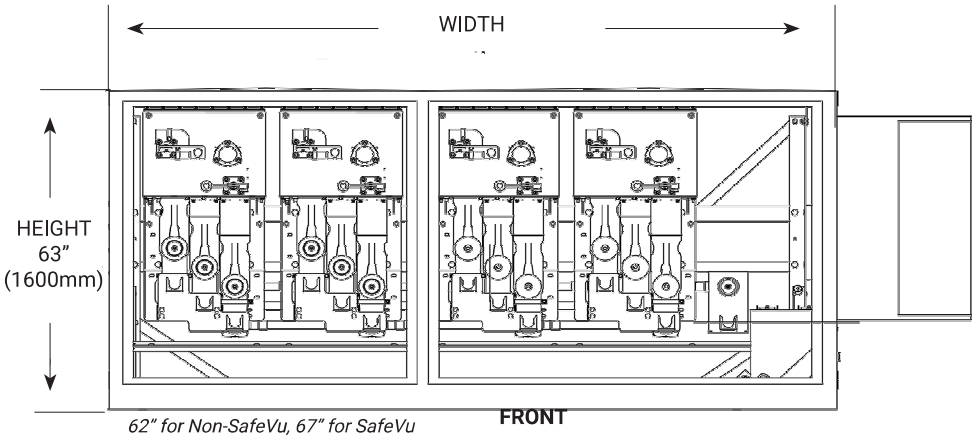

FRONT

62” for Non-SafeVu, 67” for SafeVu
With standard 36” cable compartment
With standard 24” minimum bushing height.
Add 24” width for low voltage enclosure.
Dimensions are approximate.
Do not use for construction

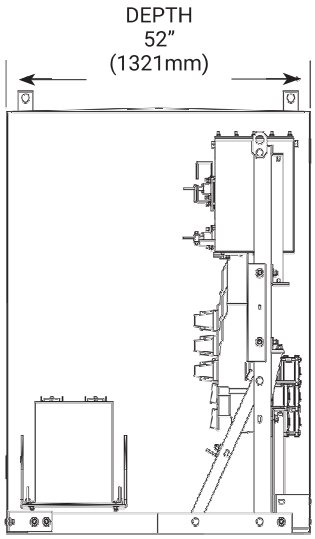

SIDE

Vault Front Access

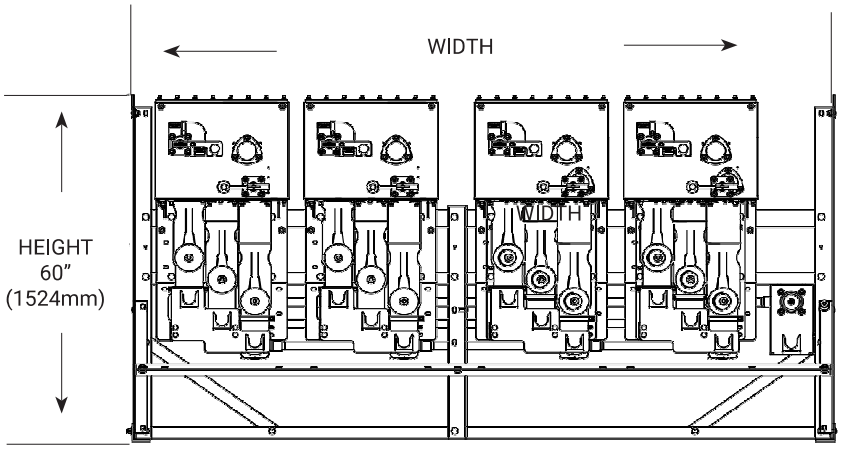

FRONT

60” for Non-SafeVu, 62” for SafeVu
With standard 24” minimum bushing height.
Depth is 25” (635mm) standard and 35”
(864mm) with SafeVu
Dimensions are approximate.
Do not use for construction.

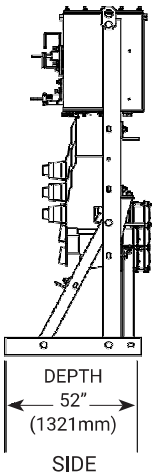

SIDE

Front Back Access

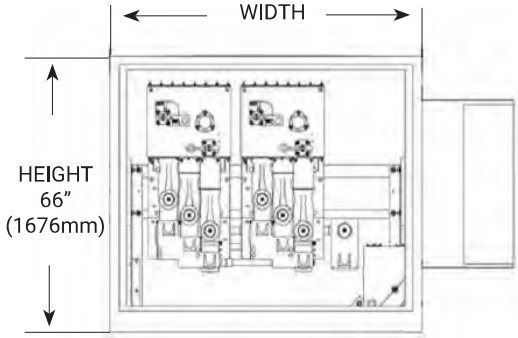

FRONT

Depth includes 27” cable compartments
with SafeVu 99” (2515mm)
with standard 24” minimum bushing height.
Add 24” width for low voltage enclosure.
Dimensions are approximate.
Do not use for construction.

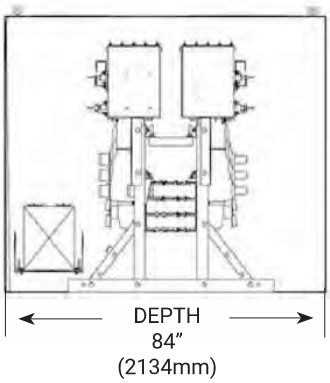

SIDE

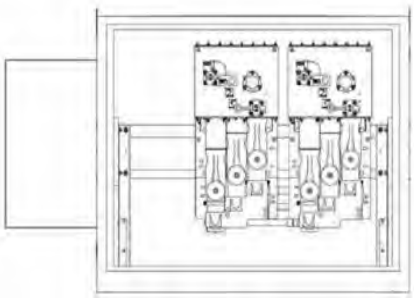

BACK

Contact us today

+1.708.388.5010 or info@gwelectric.com

G&W Electric

Engineered to order. Built to last.

Since 1905, G&W Electric has been a leading provider of innovative power grid solutions, including the latest in load and fault interrupting switches, reclosers, system protection equipment, power grid automation and transmission and distribution cable terminations, joints and other cable accessories. G&W is headquartered in Bolingbrook, Illinois, U.S.A., with manufacturing facilities and sales support in more than 100 countries, including China, Mexico, Canada, UAE, India, Singapore, Brazil and Italy. We help our customers meet their challenges and gain a competitive edge through a suite of advanced products and technical services.

gwelectric.com

© 2019 G&W Electric
GW10-2019 02/21

SAFE
NO FIRE RISK

100%
DEPTH OF DISCHARGE CAPABILITY

20+
YEARS OF BATTERY LIFE

VCHARGE 1000-10 PRODUCT DATASHEET

VCHARGE

The VCHARGE battery system utilizes patented flow battery stack technology and proprietary vanadium electrolyte processing technology to deliver cost-competitive performance over a 20+ year life cycle with no degradation. Most importantly, the VCHARGE battery system is intrinsically safe with zero fire risk from thermal runaway.

SAFETY
Aqueous electrolytes operate at **low temperatures** and are **not flammable**.

SUSTAINABILITY
Fully recyclable components and electrolyte at the end of battery life.

UNMATCHED POWER DENSITY
Proprietary stack technology drives one of the lowest-cost energy storage VRFB solutions.

LONG-DURATION DISCHARGE CAPABILITY
Proprietary purification enables cost-effective solutions in specific long-duration applications.

PROVEN GRID-SCALE DURABILITY WITH UNLIMITED CYCLES
No capacity loss with use or time. Easy to maintain. Suitable for **multiple applications.**

VCHARGE 1000-10 PRODUCT DATASHEET

TECHNICAL SPECIFICATIONS

Performance Metrics	Specification
Battery Chemistry	Vanadium Redox Flow Battery (VRFB)
Rated Power (AC Net)	1,000 kW at AC PCC[1]
Energy Rating (AC Net Discharge)	10,000 kWh
System Life	20+ years (unlimited cycles)
Usable Depth-of-Discharge	100% of Energy Rating
Energy Degradation	None
DC Voltage Range	500 – 800 VDC
Energy Storage Efficiency	78% DC-DC[2]
AC Auxiliary Power	480VAC/60Hz 3-Phase, 4-Wire Wye[3]
Standby AC Auxiliary Power Draw	<2 kW
System Response Time (pumps running)	<0.1 second
System Cold Start Time (from standby, pumps off)	<1 minute
Certifications	UL1973

Environmental Metrics	Specification
Operating Ambient Temperature	-40°F to +113°F (-40°C to +45°C)
Relative Humidity	0-100%
Enclosure Ratings	NEMA 3R+
Installation Location	Outdoor

Physical Metrics	Specification
Stack Container Dimensions (L x W x H)	40' x 8' x 9.5' (12.19m x 2.44m x 2.90m)
Stack Container Weight	59,950 lb (27,250 kg)
Number of Stack Containers	2
Electrolyte Container Dimensions (L x W x H)	20' x 8.5' x 9.5' (6.10m x 2.59m x 2.90m)
Electrolyte Container Weight (Empty)	19,360 lb (8,800 kg)
Electrolyte Container Weight (Full)	145,200 lb (66,000 kg)
Number of Electrolyte Containers	20

1. Largo Inc's DC system delivers sufficient power to provide the customer with full rated power net of all auxiliary loads and any AC system losses.

2. Largo Inc's 78% DC-DC round trip efficiency yields a net BESS AC efficiency of 68% net of auxiliary loads and AC equipment efficiency losses, under ISO 3977 environmental conditions.

3. The AC auxiliary power can be reconfigured based on local site requirements. For example, European customers can order system configured to use 400VAC/50Hz.

LARGO

4250 North Fairfax Dr, Suite 600,
Arlington VA, 22203 USA

+ 157 1491 7827 (Americas)
+353 1536 3094 (EMEA/APAC)

sales@largoinc.com
www.largoinc.com

@largo

@largo_inc

District Energy System #1 - Electric Boilers (Baseline)

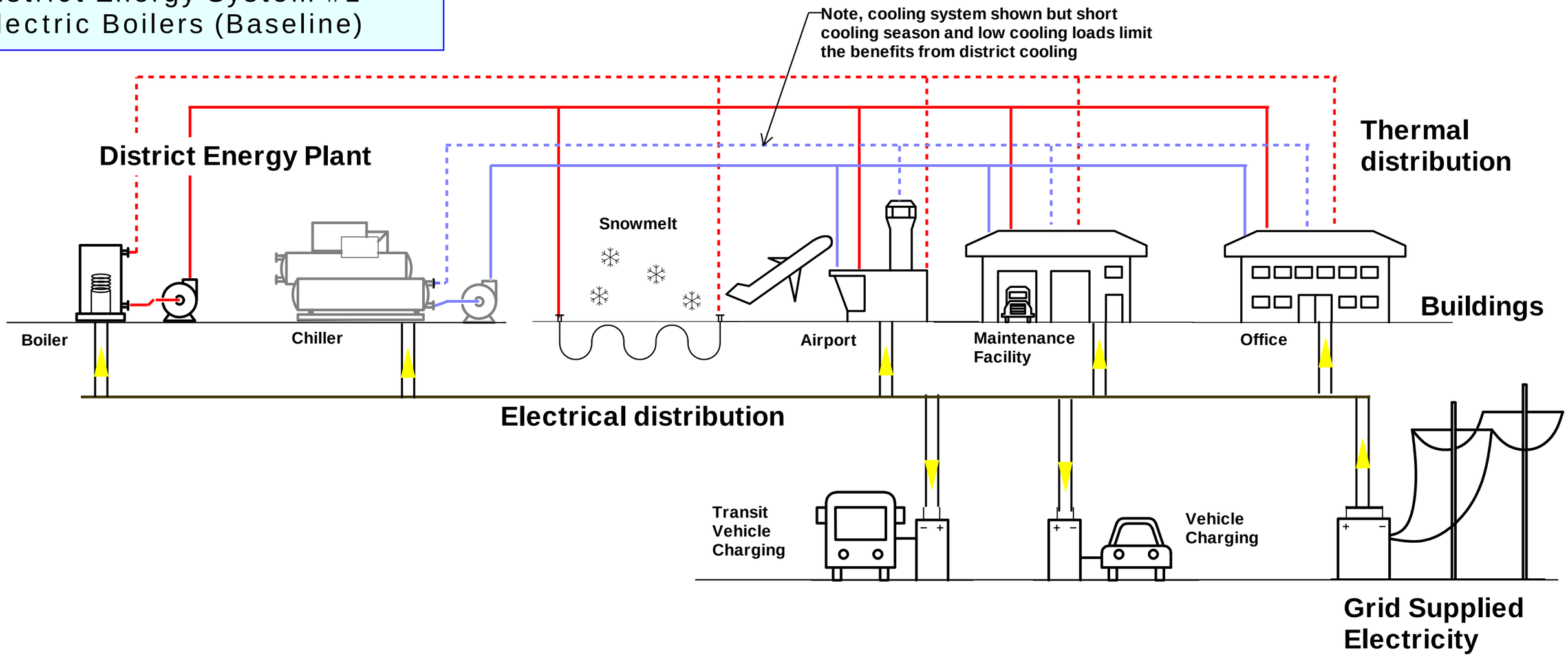

District Energy System #1a
Electric Boiler with Storage

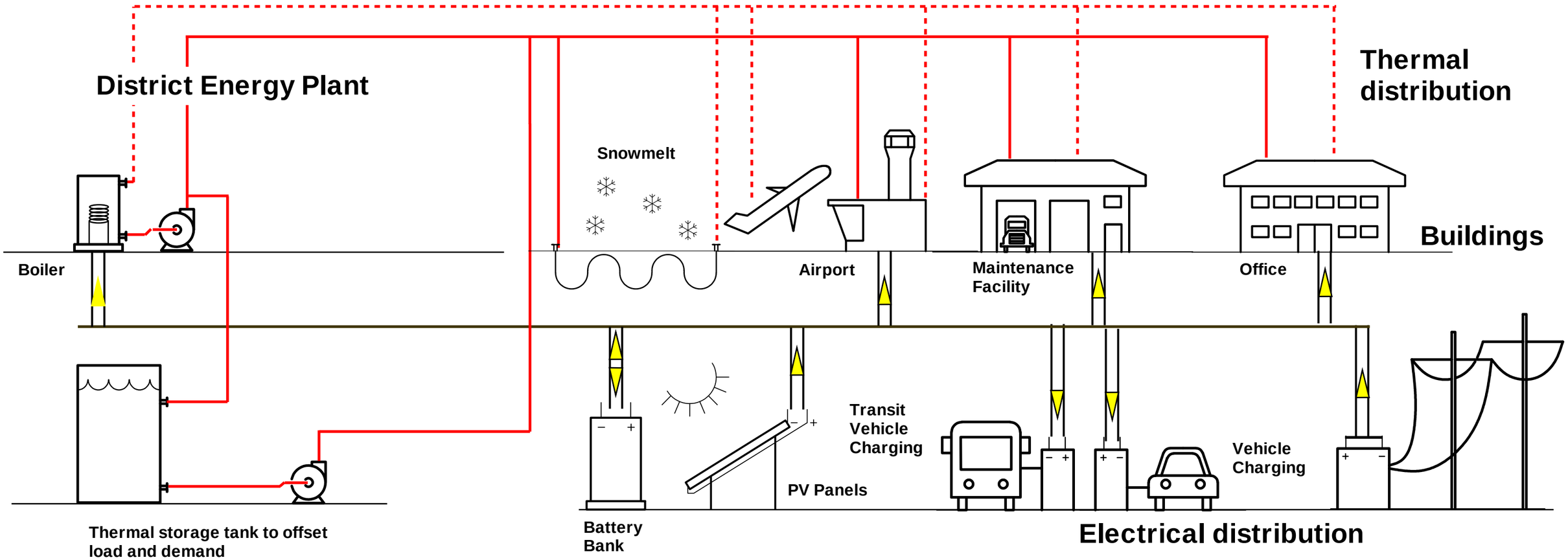

District Energy System #1b
Boiler with Molten Salt Storage

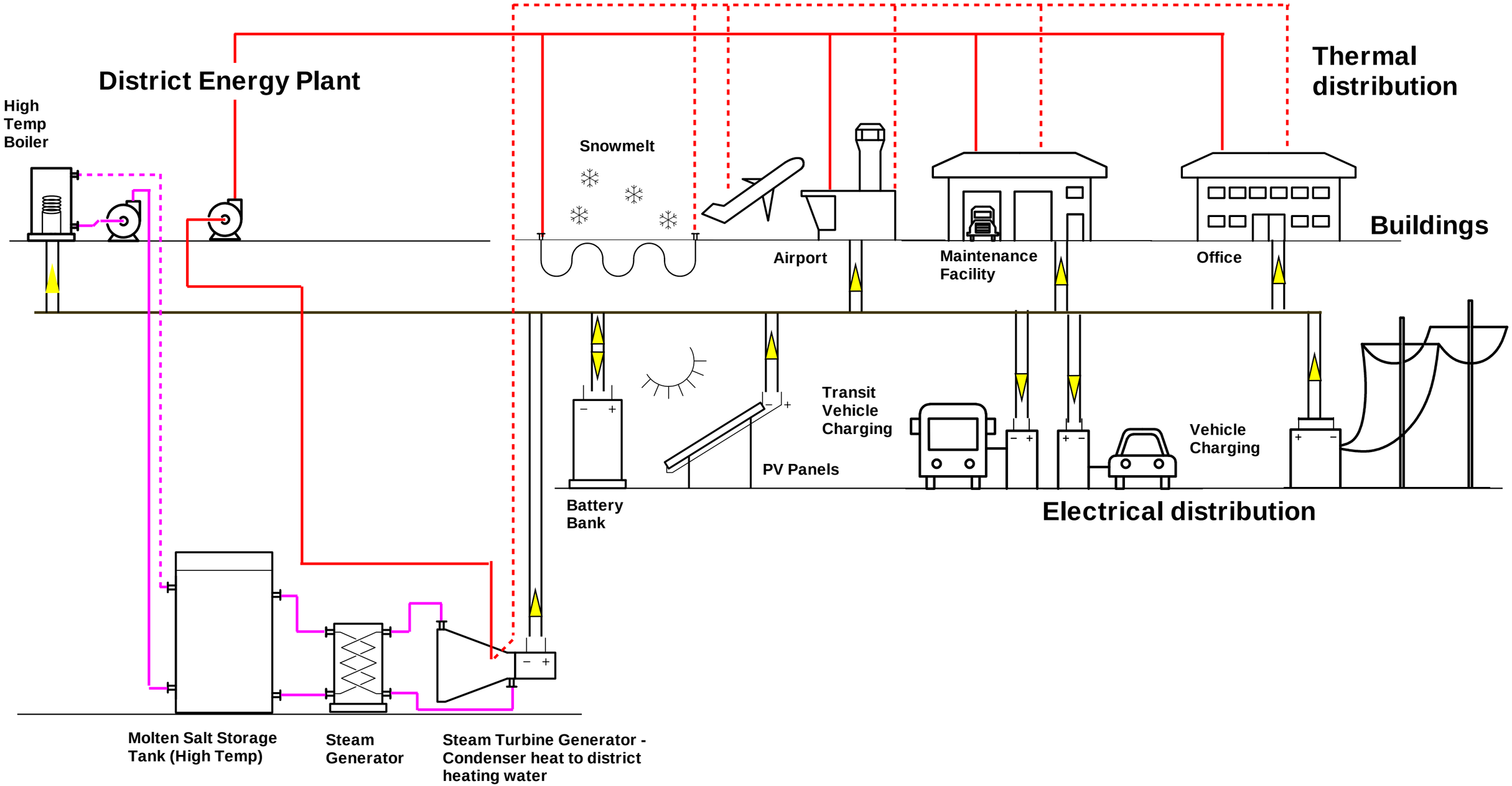

District Energy System 2
Ground Source Heat pump with thermal storage

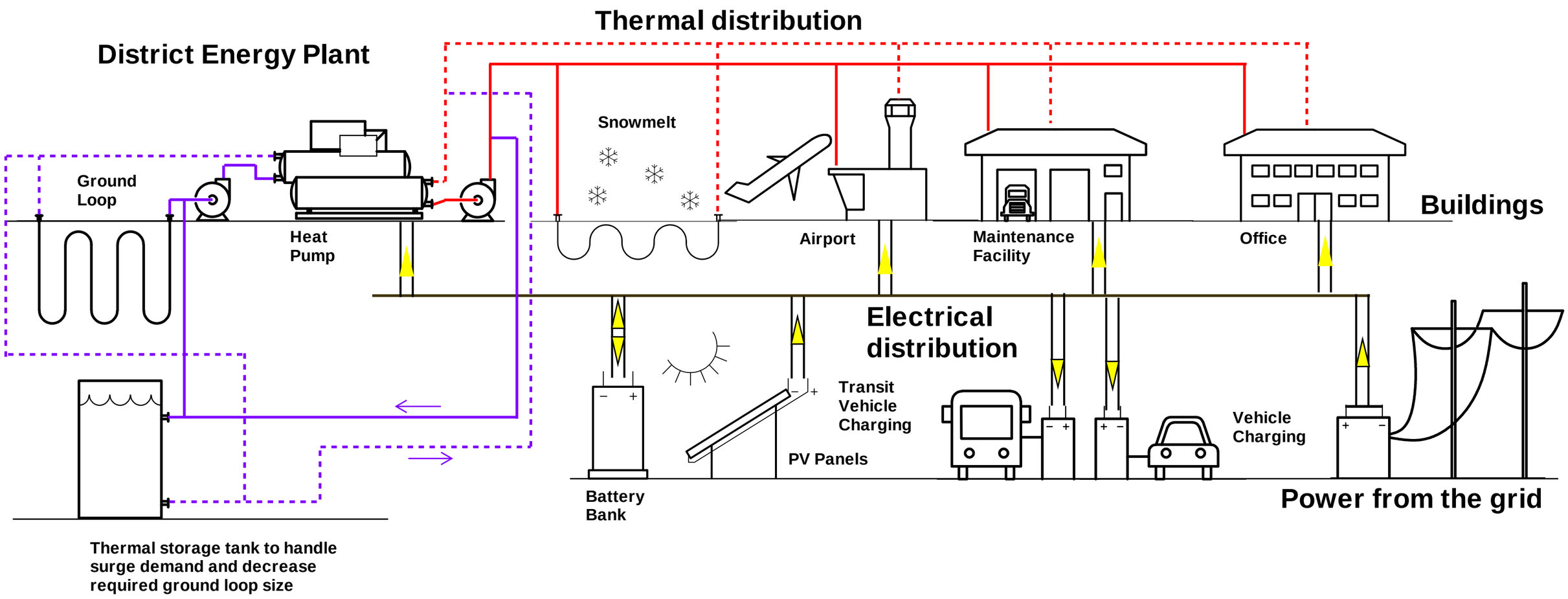

District Energy System 2a
Ground Source Heat pump with thermal storage and solar thermal

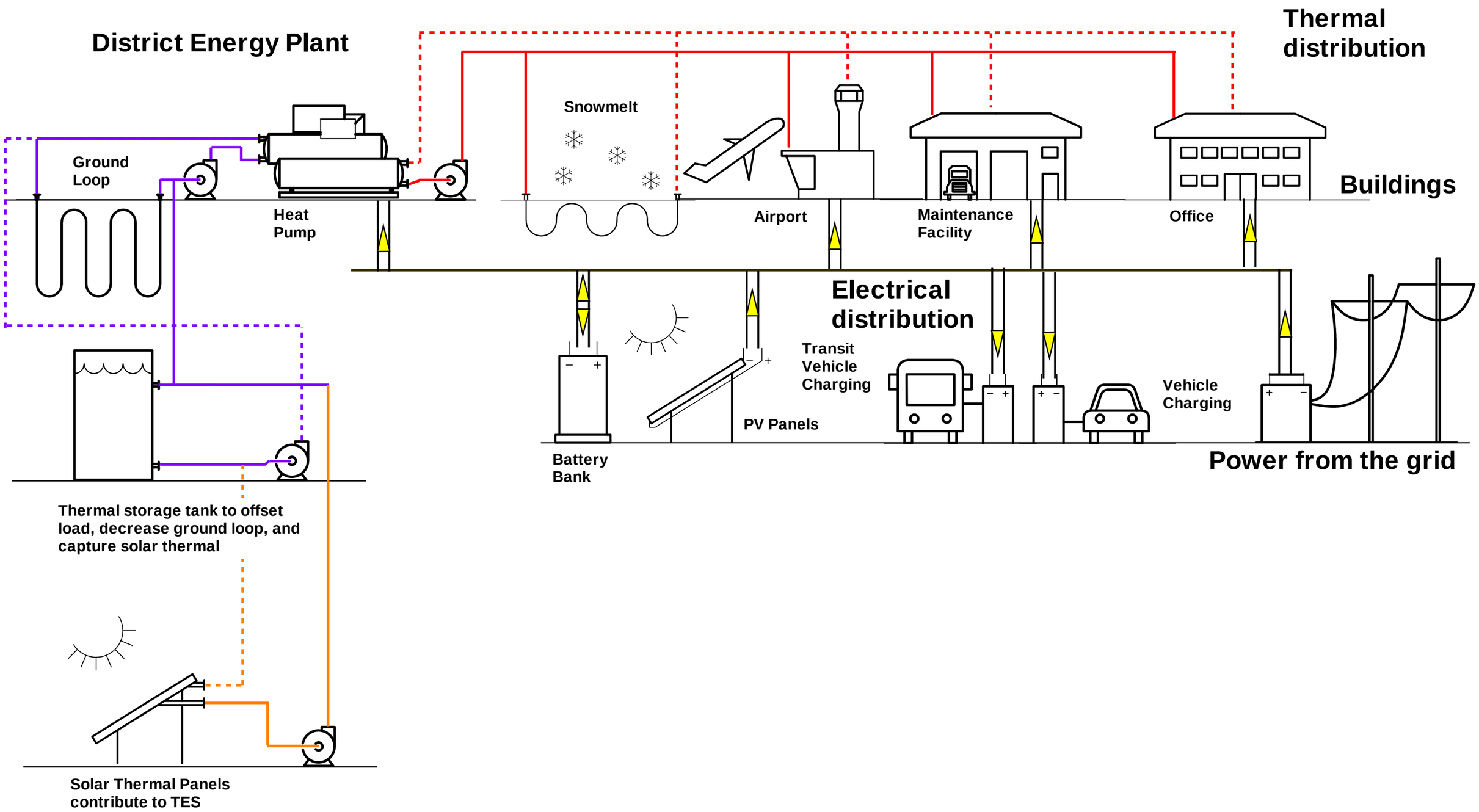

District Energy System 2b
Heat pump with ice storage and solar thermal

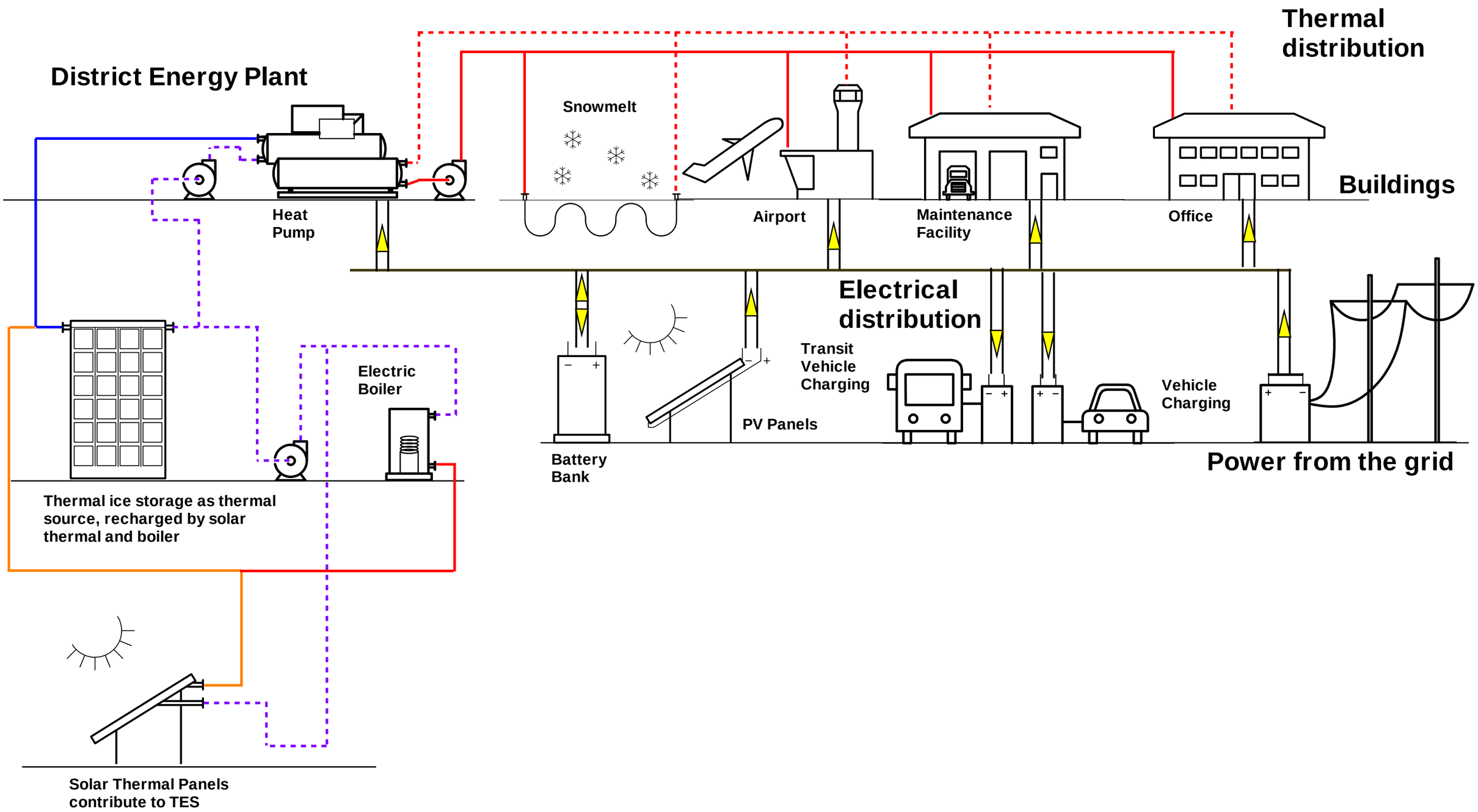

District Energy System 2c
Ground Source Heat pump with thermal storage and electric boilers

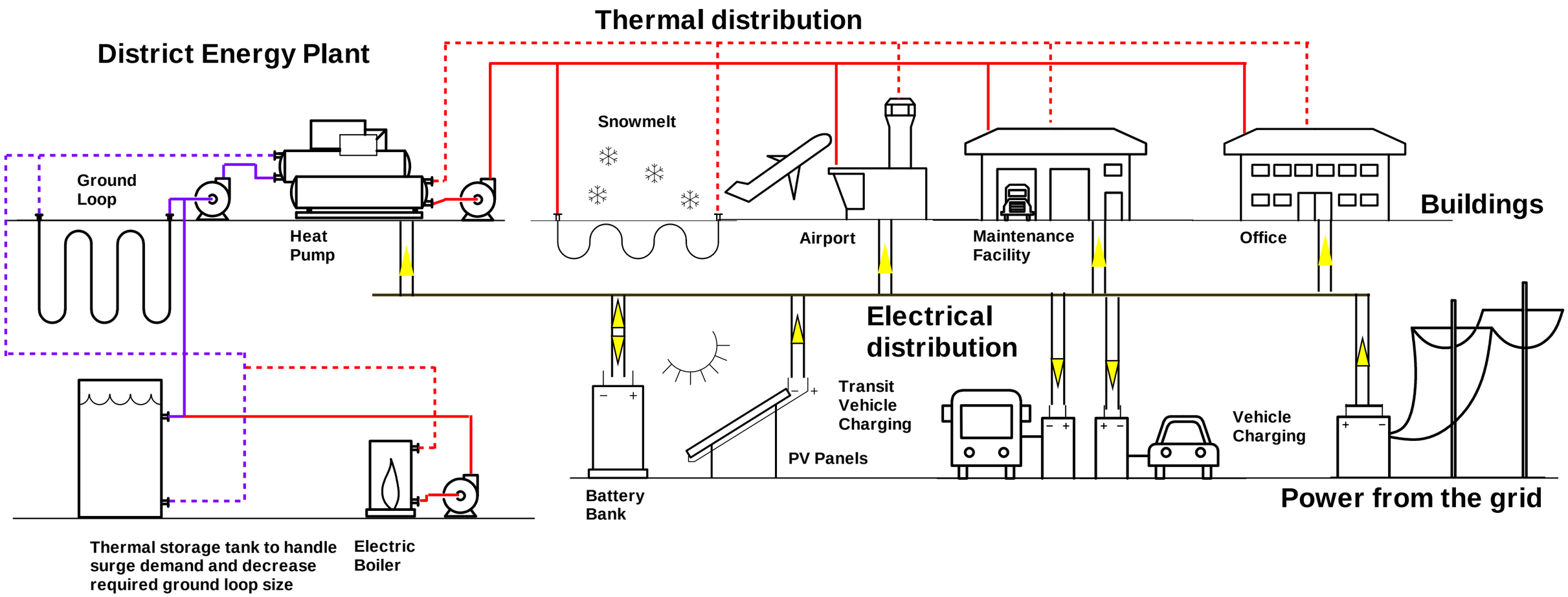

District Energy System 2x
Distributed Heat Pumps with thermal storage

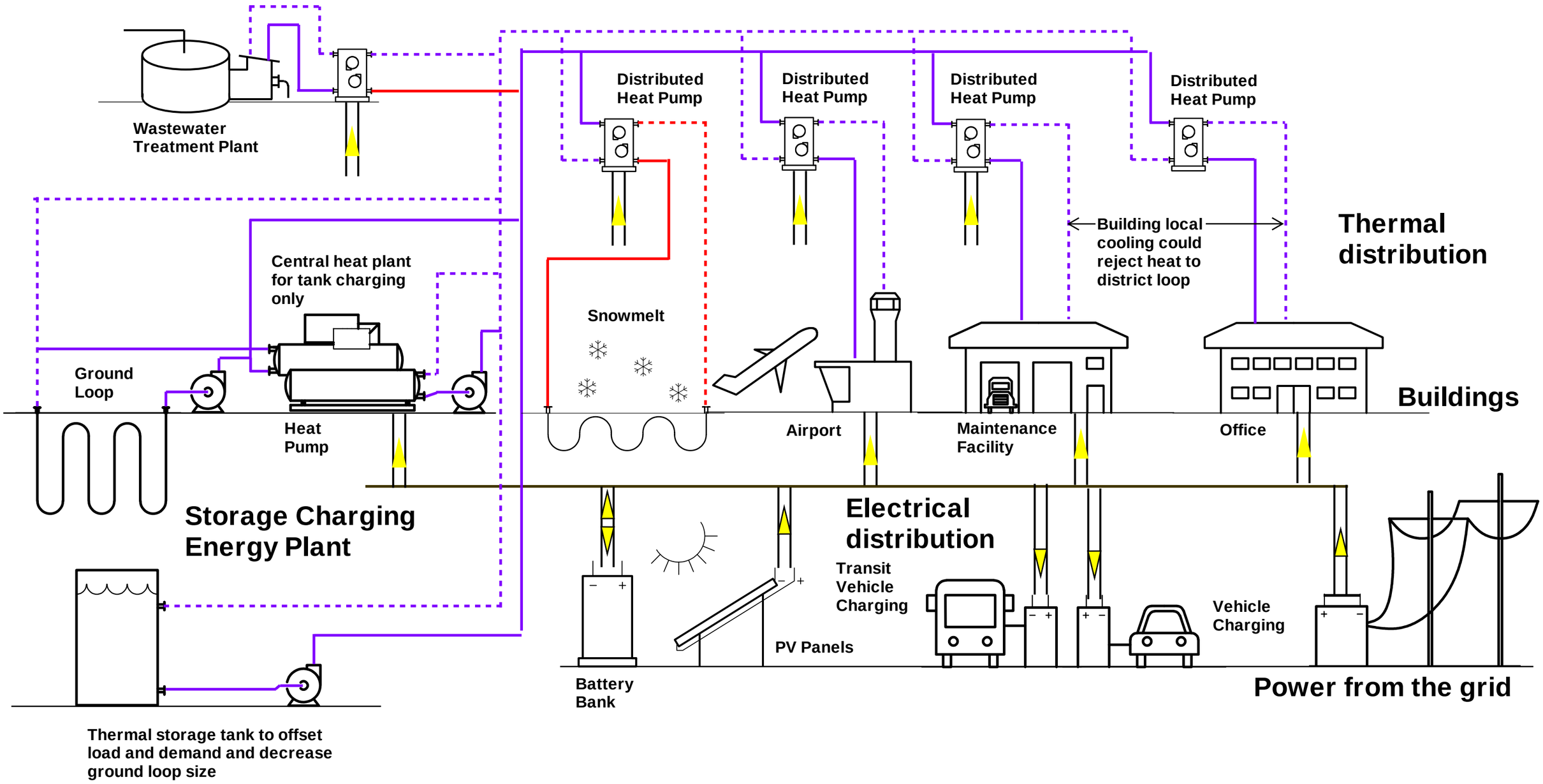

Advanced DE System 3a
Heat pump with thermal storage and fuel cell

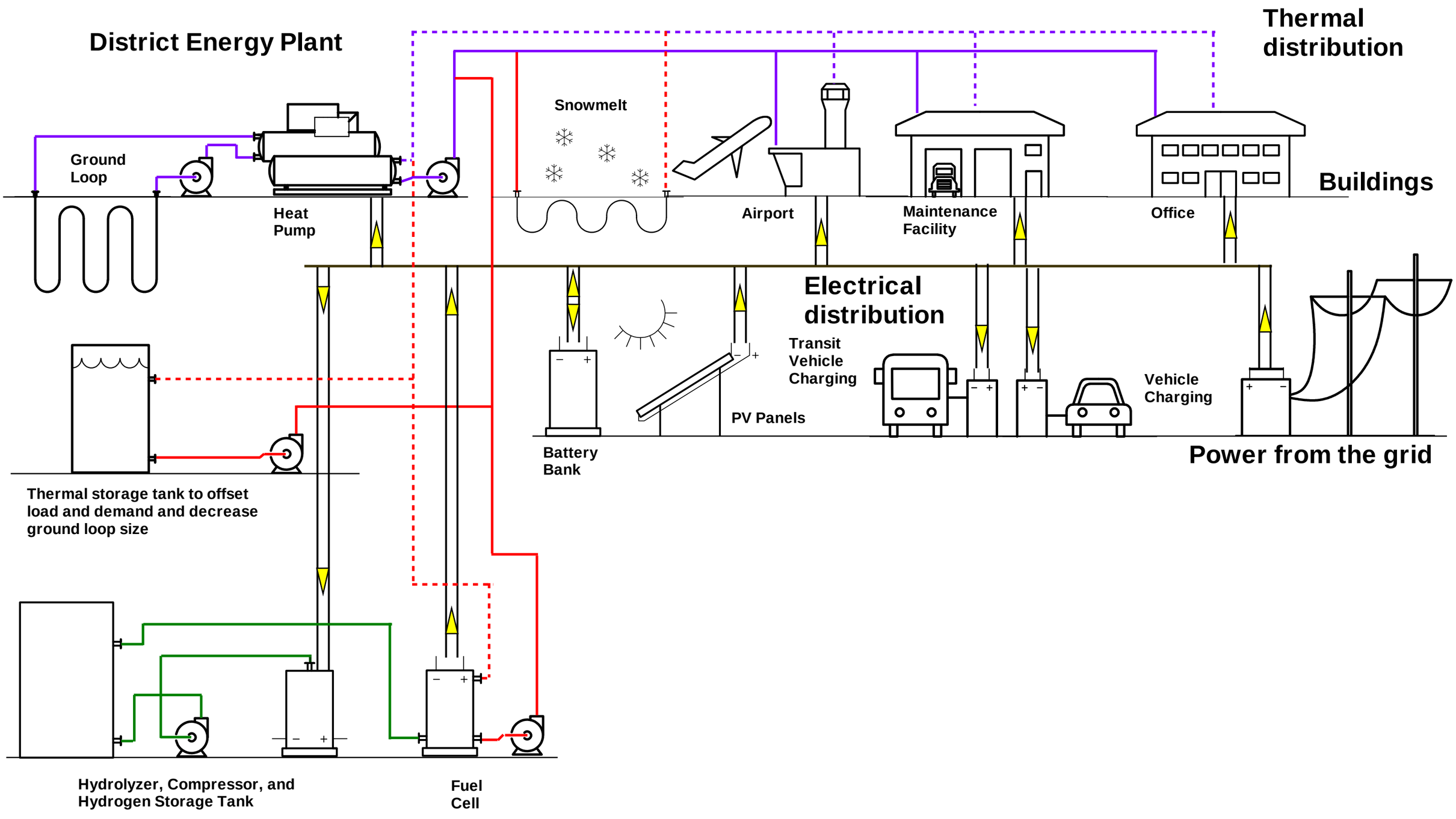

District Energy System 4
Air Source Heat pump with thermal storage and electric boilers

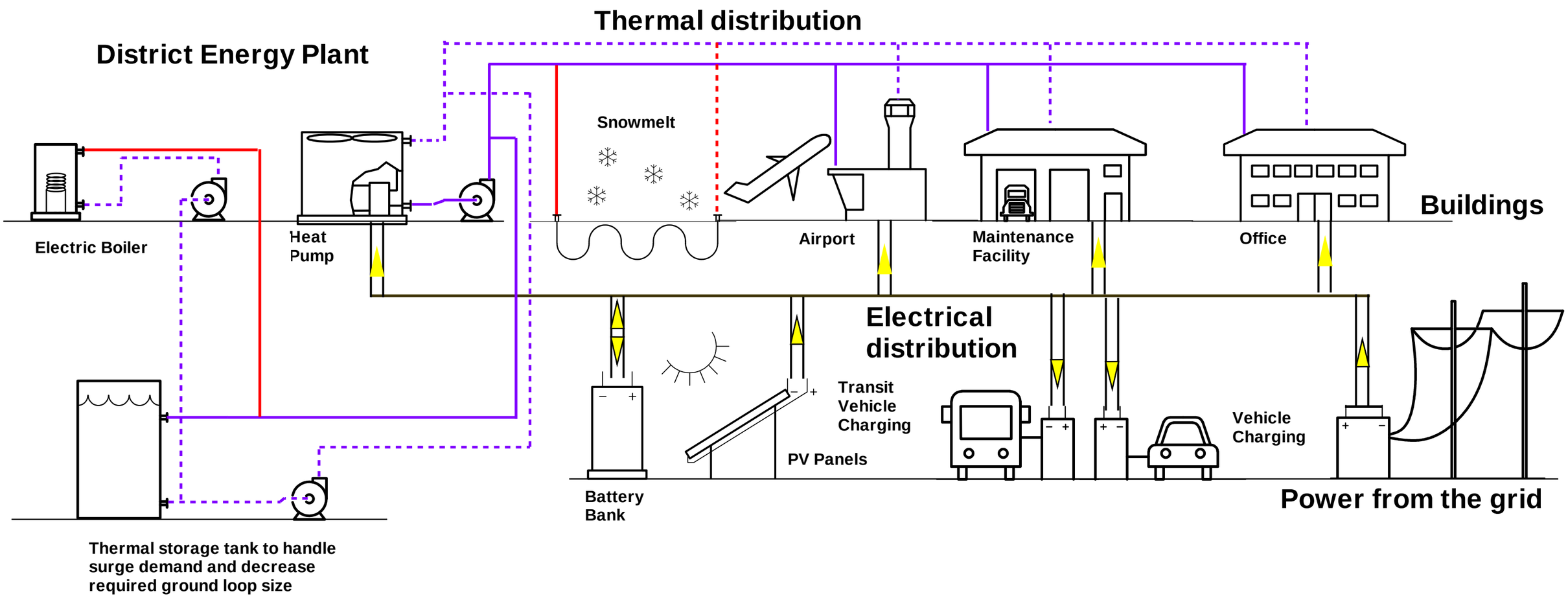
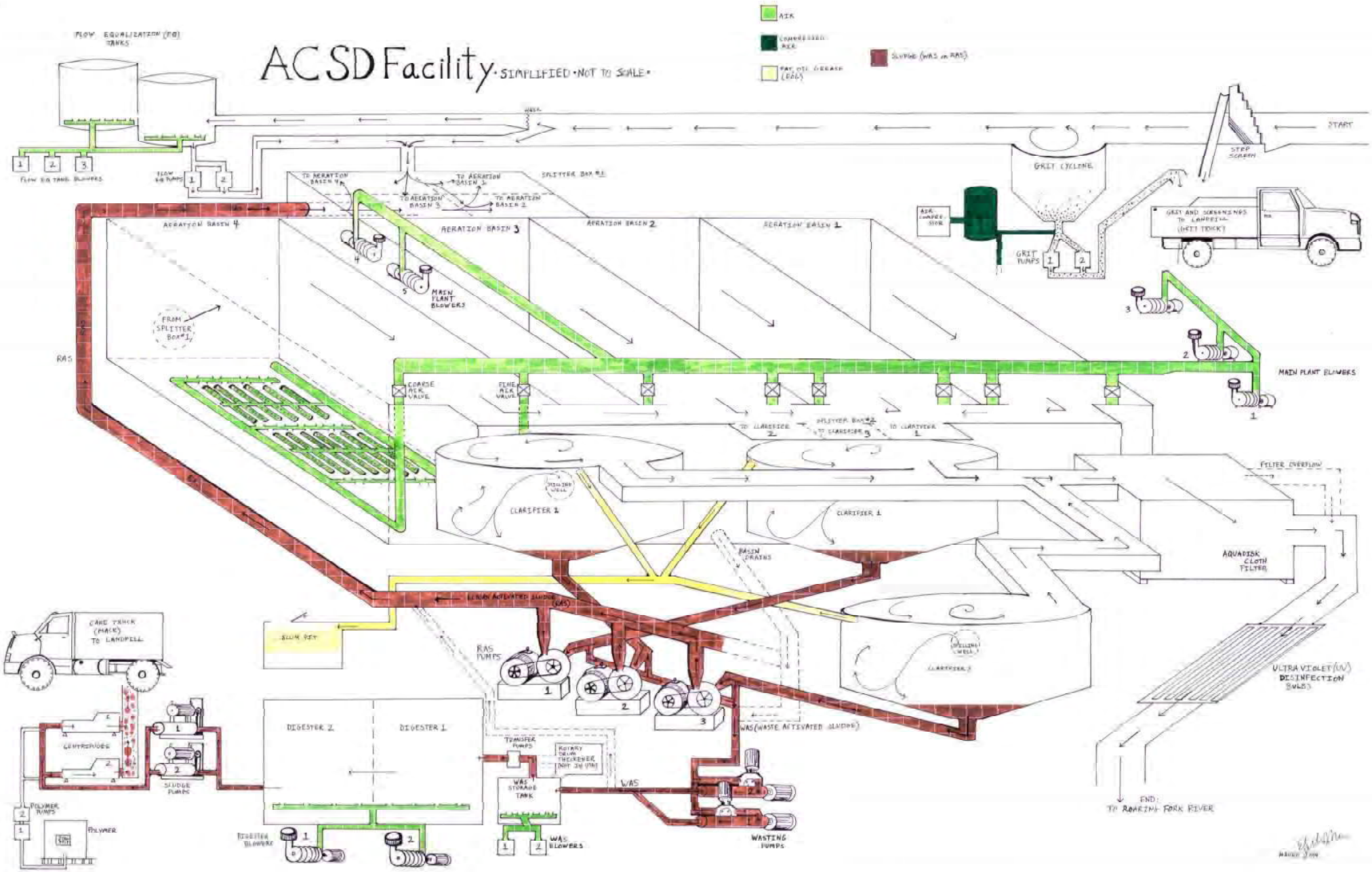
ACSD Facility · SIMPLIFIED · NOT TO SCALE ·