Attachment 4

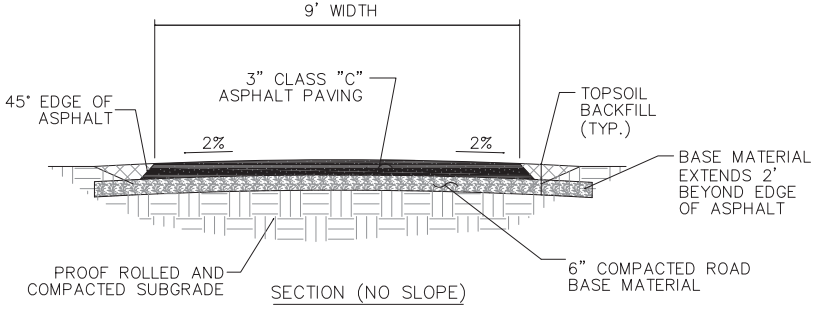

SECTION (NO SLOPE)

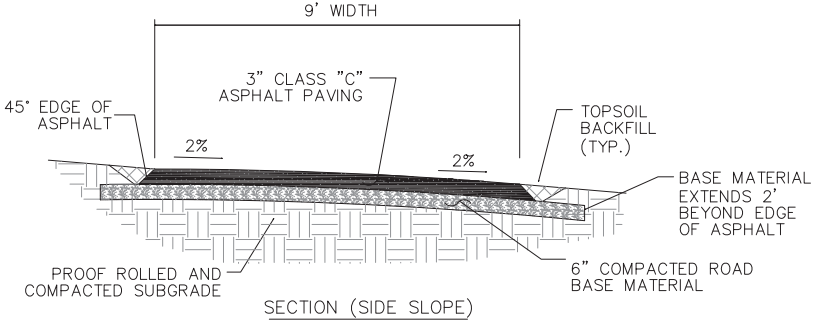

SECTION (SIDE SLOPE)

NOTE:

1. NO PORTION OF THE TRAIL SHALL EXCEED 5% GRADE TO CONFORM TO AMERICANS WITH DISABILITIES ACT STANDARDS

1 / L9 9' WIDE PEDESTRIAN - BIKE BYWAY

N.T.S